IOP Conference Series: Materials Science and Engineering

PAPER • **OPEN ACCESS**

Analysis of the centrifugal pump operation inunsteady modeas apart of a mobile machine

To cite this article: A Protopopov *et al* 2020 *IOP Conf. Ser.: Mater. Sci. Eng.* **820** 012043

IOP Conf. Series: Materials Science and Engineering **820** (2020) 012043 doi:10.1088/1757-899X/820/1/012043

Analysis of the centrifugal pump operation inunsteady modeas apart of a mobile machine

A Protopopov[1,2], A Anisimova[1], A Mukhlaeva[1], M Kalugina[1] and D Babikova[1]

[1]Bauman Moscow State Technical University

[2]E-mail: proforg6@yandex.ru

Abstract. Mobile vehicles, both tracked and wheeled, are often used to refuel/unload stationary tanks. In this case, the unsteady mode of operation of such centrifugal pumps is often observed. A constant change of operation conditions, in particular the static component of the pump head, leads to a change in its operating mode, as a result of which most of the time the pump operates in off-design mode. A methodology has been developed for determining the actual pump efficiency for a tank filling-draining cycle with two variable parameters: the distance from the level of the pumped fluid in the well to the bottom of the tank (to the on float) and the tank height (or the distance between on and off floats).

Introduction

Tracked or wheeled mobile vehicles are often used to refuel/unload stationary tanks. In this case, the operating mode of the auxiliary discharge pump as part of such machines will be unsteady due to the unstable stationary pressure of the pump. Especially, the problem of determining the efficiency of such pumps should be noted. In general, various methods for modeling centrifugal pumps are presented in works [1–6], but they all consider the pump in a stationary or quasi-stationary pressurestate. Of particular interest are the works [7–15], however, there are no answers to the questions we have, in particular, they do not provide a methodology for assessing the actual system efficiencyper work cycle.

To create a methodology for determining the actual efficiency of the pump per cycle, we consider the basic arrangement of the system of interest to us (Fig. 1).

In this system, the variable parameters are$z$ — the distance from the bottom of the tank to its top (or the distance between the on and off floats) and H_0 —the distance from the liquid level in the well to the bottom of the tank (to the on float).

Methods and results

When the pump is operating to fill such a reservoir, the static head will continuously change within the limits of $H_0 \ldots H_0+z$. To determine the actual pump efficiency per cycle, we consider its predicted pressure characteristic and the dependence of the pump efficiency on its supply (Fig. 2).

To solve the problem, we will approximate these two graphs with second-order parabolas (Fig. 3).

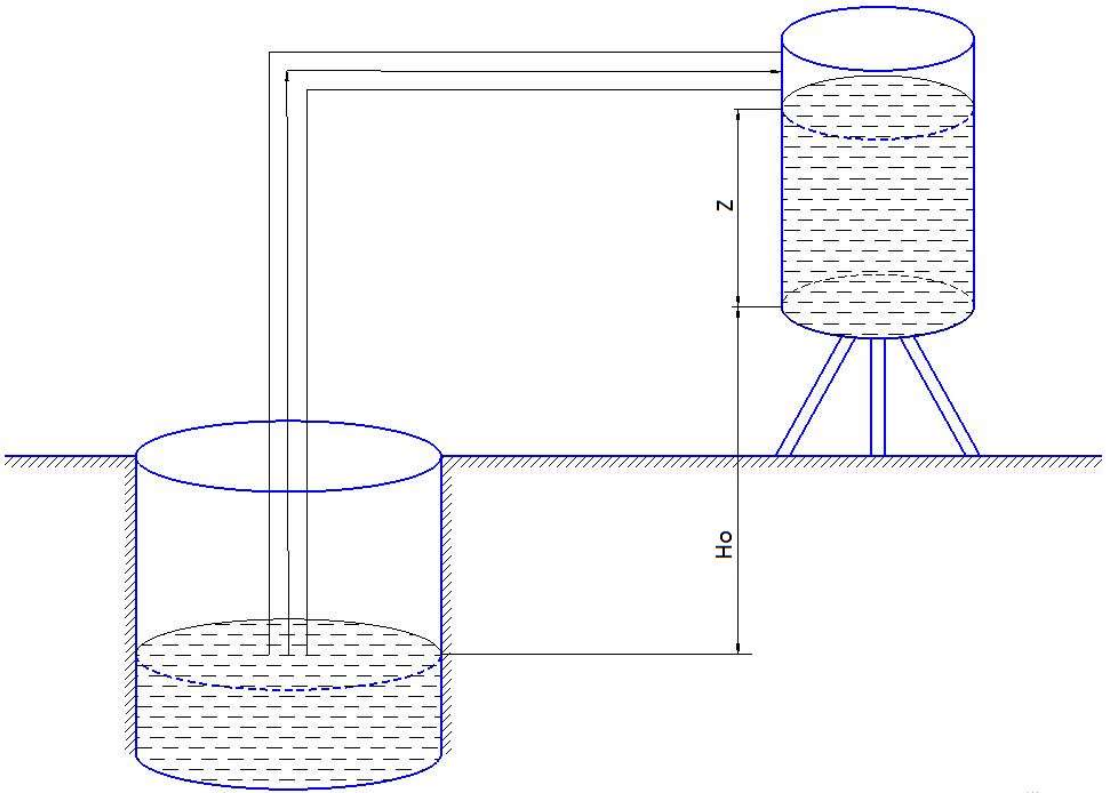

Fig. 1. Basic arrangement of the system

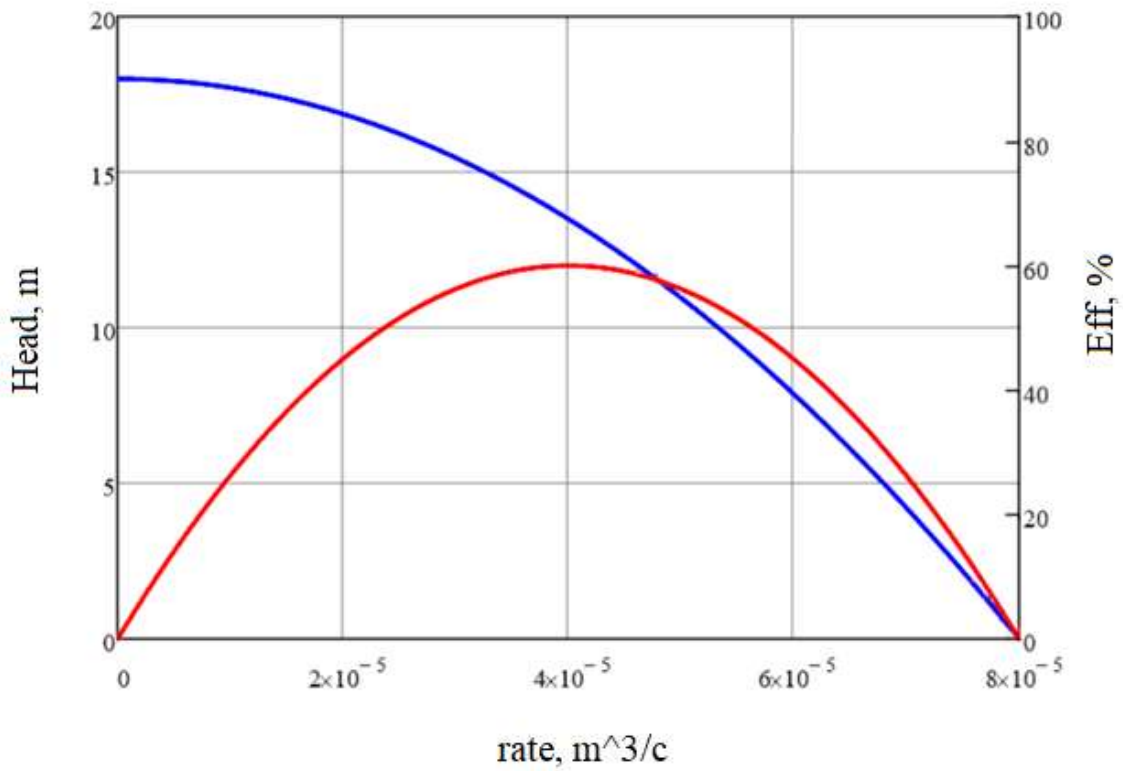

Fig. 2. Predicted pump pressure characteristic and the dependence of pump efficiency on flow rate

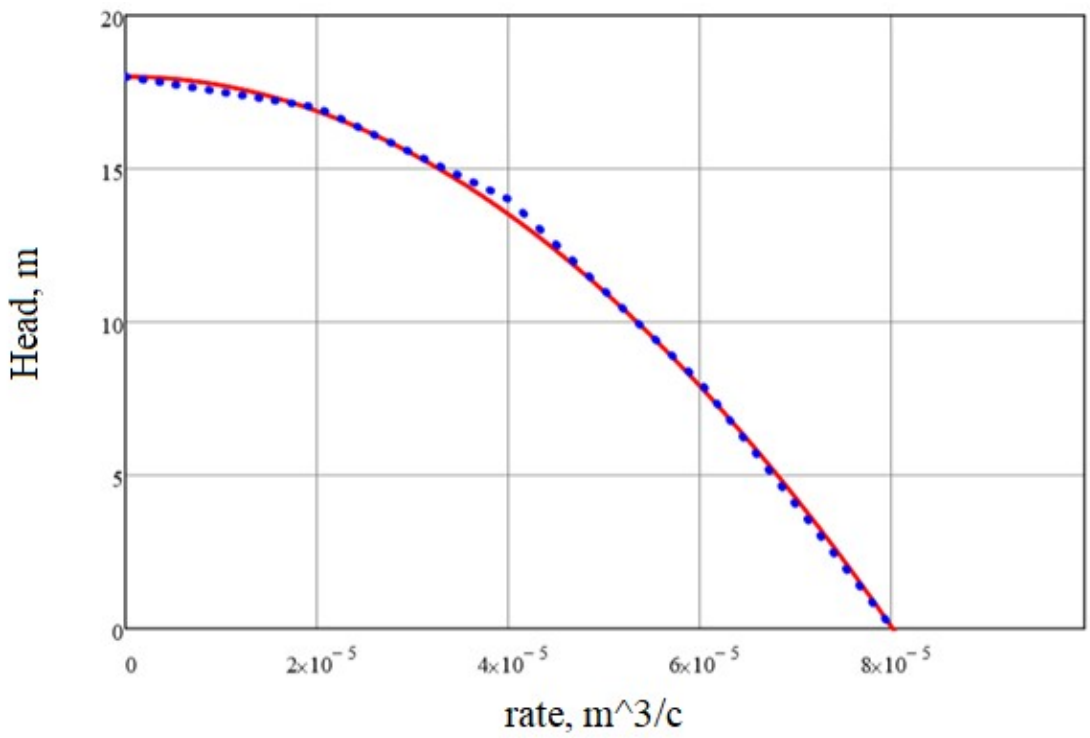

Fig. 3. Approximation of the predicted pressure characteristic

Then the pressure characteristic can be represented as

$$H(Q) = a_1 + a_2 Q + a_3 Q^2,$$

where $H(Q)$ —predicted pump head; a_1, a_2, a_3 — approximation coefficients; Q — pump flow rate.

Similarly, for efficiency we obtain the expression

$$\eta(Q) = b_1 + b_2 Q + b_3 Q^2,$$

where$\eta(Q)$ — current efficiency (corresponding to a given point in time); b_1,b_2,b_3 — approximation coefficients.

Then the actual efficiency per cycle is calculated as

$$\eta_a = \frac{\int_{t_1}^{t_2} Q\left(a_1 + a_2 Q + a_3 Q^2\right) dt}{\int_{t_1}^{t_2} \left(b_1 + b_2 Q + b_3 Q^2\right) dt}, \tag{1}$$

where$t_1$andt_2— start and end time of the tank filling process.

To determine t_1 and t_2 we use the following equations:

$$-F dz = Q dt\ ; \tag{2}$$

$$a_1 + a_2 Q + a_3 Q^2 = H_0 + z + K_p Q^2, \tag{3}$$

where F — tank cross-sectional area (which in this paper is taken as a known constant); K_p — pipe drag coefficient, as a percentage of squared flow rate.

Conclusion

We combined equations (1)–(3) in the system

$$\begin{cases} \eta_a = \dfrac{\int_{t_1}^{t_2} Q\left(a_1 + a_2 Q + a_3 Q^2\right) dt}{\int_{t_1}^{t_2} \left(b_1 + b_2 Q + b_3 Q^2\right) dt}; \\ -F dz = Q dt; \\ a_1 + a_2 Q + a_3 Q^2 = H_0 + z + K_p Q^2. \end{cases} \tag{4}$$

The system of equations (4) allows one to find the actual pump efficiency per cycle.

Thus, a technique has been created for determining the actual pump efficiency per cycle for a cyclically operating system, provided that the tank cross section is constant.

References

[1] A Protopopov and D Bondareva 2019 *IOP Conf. Ser.: Mater. Sci. Eng.***492** 012002
[2] A Protopopov and V Vigovskij 2019 *IOP Conf. Ser.: Mater. Sci. Eng.***492** 012003
[3] P Chaburko and Z Kossova 2019 *IOP Conf. Ser.: Mater. Sci. Eng.***492** 012011
[4] V Lomakin et al 2019 *IOP Conf. Ser.: Mater. Sci. Eng.***492** 012012
[5] A Gouskov et al 2019 *IOP Conf. Ser.: Mater. Sci. Eng.***492** 012013
[6] N Egorkina and A Petrov 2019 *IOP Conf. Ser.: Mater. Sci. Eng.***492** 012015
[7] K Dobrokhodov and A Petrov 2019 *IOP Conf. Ser.: Mater. Sci. Eng.***492** 012016
[8] N Isaev 2019 *IOP Conf. Ser.: Mater. Sci. Eng.***492** 012026
[9] S Korsakova and A Protopopov 2019 *IOP Conf. Ser.: Mater. Sci. Eng.***492** 012032
[10] A Protopopov and C Jakovich 2019 *IOP Conf. Ser.: Mater. Sci. Eng.***492** 012034
[11] A Shablovskiy and E Kutovoy 2019 *IOP Conf. Ser.: Mater. Sci. Eng.***492** 012035
[12] A Petrov et al 2019 *IOP Conf. Ser.: Mater. Sci. Eng*. **492** 012036
[13] V Lomakin and O Bibik 2019 *IOP Conf. Ser.: Mater. Sci. Eng.***492** 012037
[14] T Valiev and A Petrov 2019 *IOP Conf. Ser.: Mater. Sci. Eng.***492** 012038
[15] V Cheremushkin and V Lomakin 2019 *IOP Conf. Ser.: Mater. Sci. Eng.***492** 012039