IOP Conference Series: Materials Science and Engineering

PAPER • **OPEN ACCESS**

Development of Independent Learning System Arabic Letters For Blind People

To cite this article: Syahrul *et al* 2019 *IOP Conf. Ser.: Mater. Sci. Eng.* **662** 022110

IOP Conf. Series: Materials Science and Engineering **662** (2019) 022110 doi:10.1088/1757-899X/662/2/022110

Development of Independent Learning System Arabic Letters For Blind People

Syahrul[*1], M F Wicaksono[2], R H I Kurniawan[3]
[1]Department of Computer Systems, Indonesia Computer University, Bandung, Indonesia
[2]Department of Computer Systems, Indonesia Computer University, Bandung, Indonesia
[3]Department of Computer Systems, Indonesia Computer University, Bandung, Indonesia

Email: syahrul@email.unikom.ac.id

Abstract. The purpose of this study describes the design of the instrument which aims to help blind people learn hijaiyah letters. For blind people, of course there will be difficulties in learning hijaiyah letters. The research method used was the process of making tools in designing a system block diagram consisting of three main parts, namely the design of input modules, the controller / processor design, and the output design. Based on the results of the study found that an independent system that can teach hijaiyah letters to the blind, this instrument can be used independently by the blind because it provides a special braille button to represent hijaiyah letters. There are two modes provided in this learning tool, namely tutorial mode and practice mode. For tutorial mode, if a blind person presses the braille button on one of the hijaiyah letters, the letter will come out. As for the practice mode, if a blind person reads hijaiyah letters, the tool will provide a voice response to the user whether the pronunciation of the letters is correct or wrong in pronunciation. With this instrument, it is expected to help make it easier for blind people to learn hijaiyah letters.

1. Introduction

Reading hijaiyah letters should be an easy thing to learn, we only need to learn from the teacher, then we see the letters to be studied and the teacher will give an example of how to read then we just need to follow it. Unfortunately this is only limited to people who have normal vision. For blind people, of course there will be difficulties in learning this hijaiyah letter. Therefore we need a system that can teach letters hijaiyah to blind people. A number of studies were carried out in making the hijaiyah braille fonts as Syahrul did with Braille Code Trainer and designed a tool that used 8 push-buttons to form the hijaiyah letters [1-2]. Rizky Yunata et al., made a device that has a touch sensor to be read as braille, when touched it will come out a braille combination and then the sound comes out as it is touched, but this is still not effective because it only makes a sound, the user doesn't try to use it with his voice [3-4]. P Rajan, et al. explains the design of independent electronic hardware that allows blind people to read messages from cellphones, but cannot share messages without help from normal people [5]. M J Owayjan et al has designed and developed the Multi-Lingual Braille System output device for blind

individuals who allowed them to access and read text from computers. The device obtains English or Arabic text and displays it using controlled piezoelectric cells [6]. The device made by Hidayat et al is a device that can recognize all characters entered in the braille code via the push button. In addition, this device can also recognize character settings that form syllables. Every character or syllable that has been entered can be voiced by this device. The syllables that form words can also be voiced by the device per syllable [7]. Anand.R et al makes a device that can help blind people communicate with the teacher. The teacher can send words, letters, numbers and symbols on the Qwerty keyboard. This system also provides two kinds of modes, namely conversion from text to speech and conversion mode from voice to text, where the output represents letters, numbers and letters from the Braille symbol by raising and lowering the pin mechanically to make up and down solenoids. [8]. M M Burhan et al made braille cells that could be refreshed. This tool uses the piezoelectric concept in which each braille cell has a pin that is controlled using a piezoelectric bimorph so that the pin can mechanically go up and down [9]. However, in our study this is how to make a tool that teaches the letters hijaiyah and the user can immediately try his voice so that later in reading the hijaiyah letters it becomes correct. In this study, we will discuss the making of braille-based hijaiyah letter learning tools where users can immediately try their voice. This input from braille is based on the user's habits in reading braille. This tool is expected to help the blind in learning good and correct hijaiyah letters.

2. Methods

The first stage in the process of making this tool was to design a system block diagram. This system consists of three main parts, namely the design of input modules, the design of the controller / processor, and the design of the output. The design of the system block diagram is shown in Figure 1.

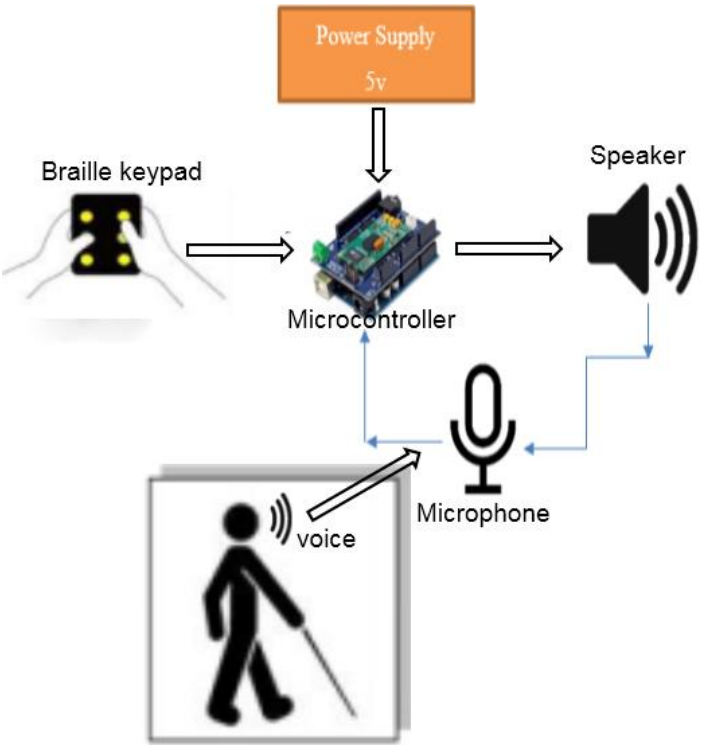

Figure 1. System block diagram

- **Microprocessor**

The processor used in system hardware design is the ATmega328 microcontroller from Arduino UNO. The Arduino has a 14 pin digital input / output where 6 of them are PWM pins, 6 analog inputs, 16 MHz crystal oscillators, a USB connection, and a port jack for resources [10]. Arduino is controlled by the Arduino IDE software that uses the C language [11]. Figure 2 shows the Arduino Uno microcontroller.

Figure 2. Microcontroller board of Arduino Uno

- **Braille Keypad**

Braille is a writing system used for blind people. Navinkumar Jadamal et al describes a Braille system composed of 6 arising points in the form of rectangles and each column contains 3 points. Letters, numbers, and musical annotation symbols can be arranged using braille. To more easily recognize it, in Figure 1, an example of a symbol or Braille code is shown [12]. Blind people make it possible to read and write thanks to the availability of the Braille code found by Louis Braille (1809-1852). This Braille code is built with patterns of arising points arranged in cells up to six points in a 3x2 matrix (see Figure 3). In this picture each cell represents letters, numbers or punctuation [13].

Figure 3. Braille Code with Standard dot positions

Braille keypad using the push button. This push button is a manually operated switch. This push button functions to disconnect or connect electricity. Figure 4 is one example of a push button.

Figure 4. Push Button

The design of the series of hijaiyah letter codes is intended to map the hijaiyah letter braille code system shown in Figure 5.

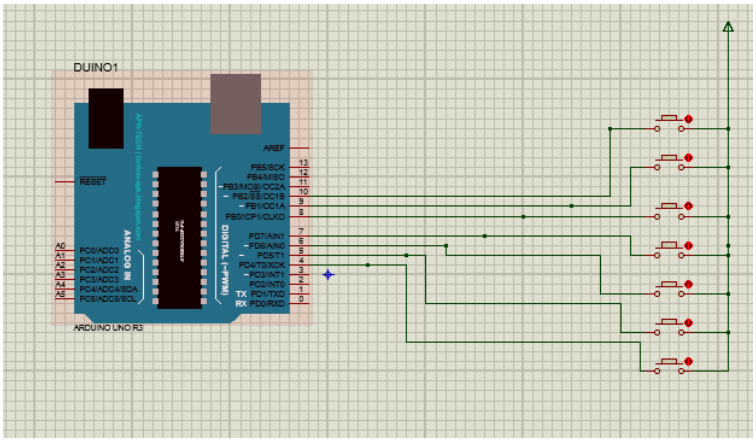

Figure 5. Design of Hijaiyah letters

- **EasyVR**

The other hardware used is the EasyVR module. This module is a multi-functional voice recognition module. This module can be used or connected with an Arduino microcontroller board. This module is very suitable for controlling applications that require sound such as turning on automatic lights, moving servo, locking the door etc. or can also complement hearing sensors on robots. To control the EasyVR module, the EasyVR Commander application is required. Figure 6 is an example of the EasyVR 3.0 module.

Figure 6. EasyVR module

EasyVR Commander is an application that functions to manage the EasyVR module. This software can do recording, upload sound and make coding on Arduino and others by using a microcontroller such as Arduino. Figure 7 is an application display from EasyVR Commander.

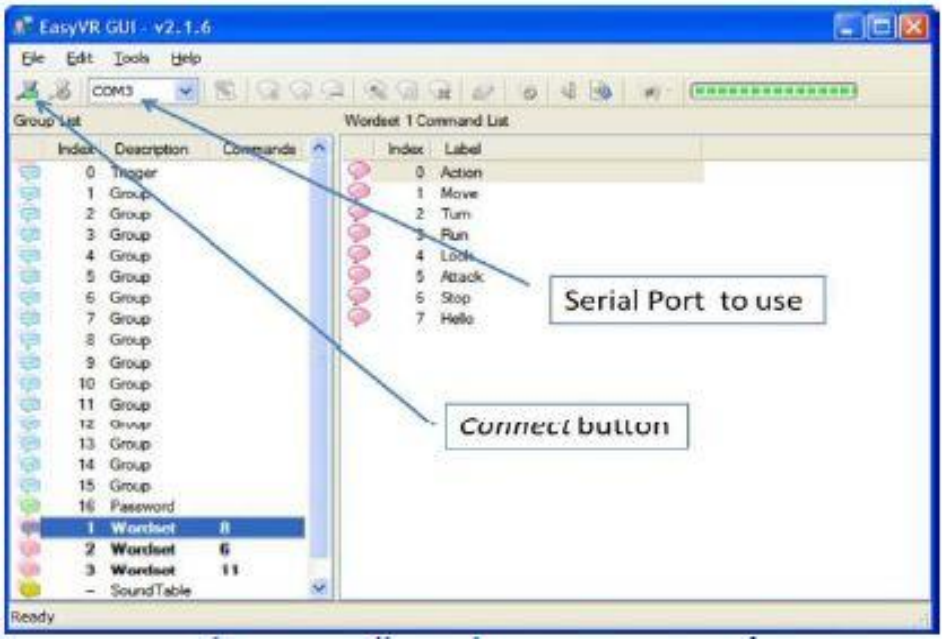

Figure 7. Display of EasyVR Commander

- **Audacity**

Audacity is an application for editing and recording sounds. This application includes freeware so anyone can download it for free. Audacity is very easy to use compared to other voice editing applications.

3. Results and discussion

Testing the Braille Hijaiyah button is intended to test the accuracy of the braille button, the result of the combination will sound the desired letter [14]. This test was carried out in the laboratory before testing the system. The aim is to ascertain whether the functions of the Hijaiyah Braille button are working properly. Table 1 shows the results of testing the Braille Hijaiyah button.

Table 1. Testing the Braille combination button

No.	Testing of letters Hijaiyah	Successfulness
1	Letter of ا	√
2	Letter of ب	√
3	Letter of ت	√
4	Letter of ث	√
5	Letter of ج	√
6	Letter of ح	√
7	Letter of خ	√
8	Letter of د	√
9	Letter of ذ	√
10	Letter of ر	√
11	Letter of ز	√
12	Letter of س	√
13	Letter of ش	√
14	Letter of ص	√
15	Letter of ض	√
16	Letter of ط	√
17	Letter of ظ	√
18	Letter of ع	√
19	Letter of غ	√
20	Letter of ف	√
21	Letter of ق	√
22	Letter of ك	√
23	Letter of ل	√
24	Letter of م	√
25	Letter of ن	√
26	Letter of و	√
27	Letter of ه	√
28	Letter of ي	√

Based on the data in Table 1, testing of the braille hijaiyah button on the hijaiyah letter learning tool was tested 28 times and there was no error (with the note that the emphasis must be correct), so the percentage of success was 100%. The next test is to record the pronunciation of the letters Hijaiyah. This test is intended to test the accuracy of the tool in receiving the user's voice. The scenario carried out in this test is that the user issued a sound according to the input of the braille button and then measured the success rate. Table 2 shows the success rate of sound testing of Hijaiyah letters.

Table 2. Testing the Braille combination button

No.	Testing of letters Hijaiyah	Successfulness
1	Letter of ا	√
2	Letter of ب	√
3	Letter of ت	√
4	Letter of ث	√
5	Letter of ج	√
6	Letter of ح	√
7	Letter of خ	√
8	Letter of د	√
9	Letter of ذ	√
10	Letter of ر	√
11	Letter of ز	√
12	Letter of س	√
13	Letter of ش	√
14	Letter of ص	-
15	Letter of ض	√
16	Letter of ط	√
17	Letter of ظ	-
18	Letter of ع	-
19	Letter of غ	-
20	Letter of ف	√
21	Letter of ق	√
22	Letter of ك	√
23	Letter of ل	√
24	Letter of م	√
25	Letter of ن	√
26	Letter of و	-
27	Letter of ه	√
28	Letter of ي	√

Based on the data in Table 2, the sound recording test for Hijaiyah letters was carried out 28 times. Tests on each letter are carried out 5 times and some of the results have errors due to the difficulty level of the letters that are quite difficult. The success rate is 82% (namely 23/28 x 100% = 82%)

4. Conclusion

The design of the Hijaiyah letter learning module system for person with disabilities, especially blind children in learning to recite the Hijaiyah letters can be completed. Based on the results of testing and analysis of the hijaiyah letter learning for Arduino-based blind people who were late made, it can be concluded that this tool works according to the planned function of Hijaiyah letter key press and Hijaiyah letter sound recording, although there are still some errors that occur. Further testing of this system is how to conduct a direct test involving blind children to be able to identify the additional features needed and feedback from them to make them more perfect. The tool designed is an interactive learning media so that it is expected that blind children will be easily interested and actively learn the Hijaiyah letters through tools without a teacher.

References

[1] Komalasari, K. 2019. Living Values Based Interactive Multimedia in Civic Education Learning. *International Journal of Instruction*, **12**(1), pp. 113-126.

[2] Kurniawan, B. (2018, August). Integrated Information System for Radio Frequency Identification Based Administration and Academic Activities on Higher Education. In *IOP Conference Series: Materials Science and Engineering*. **407**(1), p. 012097.

[3] Rahmadahni, R Yunanta, A Hendriawan, R Akbar 2011 *Desain keyboard dengan output suara sebagai alat bantu pengenalan huruf Braille.* **23**(6), pp. 108-121.

[4] Mardiani, G. T. (2018, August). Construction industry project planning information system. In *IOP Conference Series: Materials Science and Engineering*. 407(1), p. 012093.

[5] P Rajan, B Thilagavathi .2014. *A system to convert electronic message to braille for visually impaired*, International Journal of Emerging Technology in Computer Science and Electronics (IJETCSE), **8**(1), pp. 5- 15

[6] Owayjan, M. J., Wehbe, T. Z., Daher, E. Y. B., and Ayoub, O. A. 2013. The design and development of a multi-lingual Braille system output device with audio enhancement. *Journal of Software Engineering and Applications*, **6**(05), pp. 289.

[7] Beg, U., Parvathi, K., and Jha, V. 2017. Text Translation of Scanned Hindi Document to Braille via Image Processing. *Indian Journal of Science and Technology*, **10**, 33.

[8] Haristiani, N., and Firmansyah, D. B. 2016. Android application for enhancing Japanese JLP N5 kanji ability. *Journal of Engineering Science and Technology*, **12**, pp. 106-114.

[9] M M Burhan, S F Toha.2016. The system architecture of e-braille by using the microcontroller and external controller unit. *Journal of Engineering and Applied Sciences*, **11**(6), ISSN 1819-6608 ARPN.

[10] Sujatha, R., Khandelwa, P., Gupta, A., and Anand, N. 2017. A framework for communication between visually impaired, hearing impaired and speech impaired using arduino. *In Materials Science and Engineering Conference Series*. **263**(4), p. 042048.

[11] Soegoto, E. S., and Marica, A. 2018. Influence of Internet Marketing on Concert Ticket Purchasing. In *IOP Conference Series: Materials Science and Engineering*. **407** (1), p. 012015.

[12] Jadamali, N., Jadamali, P., Shirsat, K., and Basavaradder, A. Electronic Progressive Braille Learning Kit for Blind (Low Cost, All Languages and Multiline Braille Screen). *International Journal of Computer Applications*, **975**, pp. 8887.

[13] Katuk, N., Zakaria, N. H., and Ku-Mahamud, K. R. 2019. Mobile Phone Sensing using the Built-in Camera. *International Journal of Interactive Mobile Technologies*, **13**(2), nomor 4 - 8