IOP Conference Series: Earth and Environmental Science

PAPER • **OPEN ACCESS**

Renewable sources of energy in distributed power generation

To cite this article: Georgij I Kol'nichegko *et al* 2020 *IOP Conf. Ser.: Earth Environ. Sci.* **548** 052008

Renewable sources of energy in distributed power generation

Georgij I Kol'nichegko, Yakov V Tarlakov* and Alexander V Sirotov

Faculty of forestry, timber industry technologies and landscape gardening construction, department LT10 Automation of Technological Processes, equipment and safety of productions, Bauman Moscow State Technical University, Mytishchi branch (Bauman Moscow State Technical University), 1st Institutskaya St., 1, 141005, Mytishchi, Moscow Region, Russia,

*E-mail: g_kolnic@mail.ru

Abstract. Russia as the leading exporter of traditional energy resources is considering renewable energy sources (RES) as autonomous sources of energy, being the basics of a new direction which is being developed intensively now – distributed power generation. In autonomous energy systems based on RES power generation of RES is reserved by means of traditional power supplies. In this case there is a task to create a tracking inverter transforming direct current (DC) into alternating current (AC) according to characteristics of a parallel operating AC generator. An inverter designed in Bauman Moscow State Technical University can successfully solve this task and by means makes it real to connect AC and DC generators in order to sum up their capacities in a single electric system.

Power generation based on renewable sources of energy (RES) is developing rapidly in the world. Its share in world production has increased from 2% in 2003 to 10% now. In many countries having no deposits of carbohydrates opposed to Russia there are impressive plans to develop alternative power generation (i.e. by means of RES). But it is evident that those countries which are not developing renewable power generation today in 10-15 years' time will not be able to hold their positions on the energy market. Renewable energy sources should be considered primarily as autonomous sources of energy, as the basis of distributed power generation. That is why in Russia there is a focus on RES development and due to this there is a branch of high-tech electric machinery industry being created. The development of RES power generation is characterized by a steady increase of energy volumes received from them, in Russia the growth equals to 6-9% in average. Electrical systems based on RES are being created which stimulates the expansion of working out the efficiency of power generation, control augmentation and improving reliability of power supply and energy saving in these systems.

The positive dynamics of the increase in generation by RES is mainly achieved by increasing the efficiency factor of RES as well as by constant reduction in cost of 1 kWh of energy produced and cost-cutting of RES production which happens due to advances in technological operations, increase in amounts of its production and competition among RES producers. Nowadays rising the efficiency of power generation based on RES is of immediate interest due to increasing reliability of power supply and energy saving which could be achieved in an attempt to automate work control of generating sources as well as to reduce losses in a modified process and cutting energy losses while transmitting it from the source to the consumer.

Rising the efficiency of power generation through RES requires solving several problems arising from creation and exploitation of RES. Here are some of them:

- Lo Одинарный межстрочный интервал.
- w density of energy carrier on the area of power generation as well as significant remoteness of power generating capacities from consumers.
- Random arrival of energy sources from RES
- Using a big amount of power generation units of various capacity and parameters
- Low-level energy factor of power generation and significant losses while transmitting and converting energy up to required parameters
- Unequal power consumption and peak loads twice or three times exceeding parameters of normal rating of electric system.

It is possible to solve these problems by creating electrical systems having traditional energy sources operating on classical energy carrier – petrol, diesel, gas etc. alongside with RES.

There are three modes of operation of these systems:

- There is no power generation from RES, power supply is organized with traditional generator, e.g. diesel generator.
- There is enough electrical energy from RES and power supply does not involve diesel generator.
- Hybrid mode of operation including diesel generator together with energy sources from RES.

This participatory mode of operation including traditional and alternative energy sources is the most difficult for electrical system in terms of organizing power supply.

There are many papers devoted to power generation from RES. Alternative power generation is special due to its strong dependence on external conditions. There can be its own type of renewable energy for every region. For regions with high level of insolation it is appropriate to use solar energy as solar panels could be mounted closely to consumers which strongly reduces capital intensity of these projects. In places with constant winds (for instance, on the sea chores) wind power could be the most efficient, in the regions with highly-development agricultural sector – biogas and so on [1,2].

World trend is the following: the cost of alternative energy sets is decreasing due to the increase in the price of carbohydrates, which benefits the perspective development of RES power generation.

Process of power generation from RES is the first step in power supply of final consumer as this energy must be transformed in order to its further accumulation, saving and consuming. The difficulty of this kind of transformation is primarily connected with the fact that various RES generate electric current with different parameters.

Solar cells (PV) generate direct current, each solar panel having different voltage and current due to its physical condition, possible damages, location and losses while energy transmitting. Damaged solar cell in panel or solar panel in the system of several panels can stop producing electric current totally and become consumers or the reason for total current limit. To enable battery charging from several solar panels it is required to install a control unit and battery charger. Modern batteries are demanding of current and charging voltage, prevention of overcharging deep discharge as well as to temperature modes of exploitation, which can lead to unsatisfactory results of power sets operation.

Wind electrical energy differs radically from solar cells described above. The considerable difference is that wind turbines produce alternating current which requires its rectification for its accumulation. Also due to its nature AC of each wind turbine has its own frequency and start angle of phase shifting, it is caused by individual rate of turn of each generator. Surplus of energy from wind turbines which occurs in case of strong wind and lack of consumers as a rule is compensated by high-powered resistors transforming energy surplus into heat. This is done in order to prevent excessive rotor speed which can occur idle when weak magnetic field insufficiently hampers rotor of the generator. Heat obtained in resistors is either dispersed or used to heat water in water and heat supply systems.

The situation when electrical energy generated from RES exceeds the necessary volumes is quite rare. The most common case is the lack of electrical energy from RES to cover the needs of energy consumption.

In these cases, to provide a reliable power supply there is a generator working on traditional energy source such as petrol, diesel, gas etc. in all autonomous sets. Such kind of generator switches on in the moment of increase in consumption or in the period of lack of necessary electrical energy from RES.

Technological process of energy consumption must be flexible due to switching in and off different means of power generation and its use in participatory mode with traditional sources of power generation and RES. [3].

Such kind of operation is the most difficult for the electric system from the point of electrical supply organization: it is used in case of insufficient power generation from RES and when the level of capacity consumption increases excessively due to switching on large electrical motors or other technological reasons.

The biggest part of industrial and household energy consumers operates on DC. Working of consumers on AC and having one existing AC generator in the network makes it necessary to create a matching AC inverter [4]. Thus, there is a task to create a tracking inverter transforming DC to AC according to characteristics of a parallel operating AC generator. The main characteristics which must be kept while inverting DC into AC are voltage, frequency and angle of phase shift.

To solve this task a grid-controlled inverter was created in Bauman Moscow State Technical University (BMSTU) [3]. In the figure 1 there is a circuit of parallel work of E1 and E2 sources in the grid-controlled inverter mode. Inverter operates the following way.

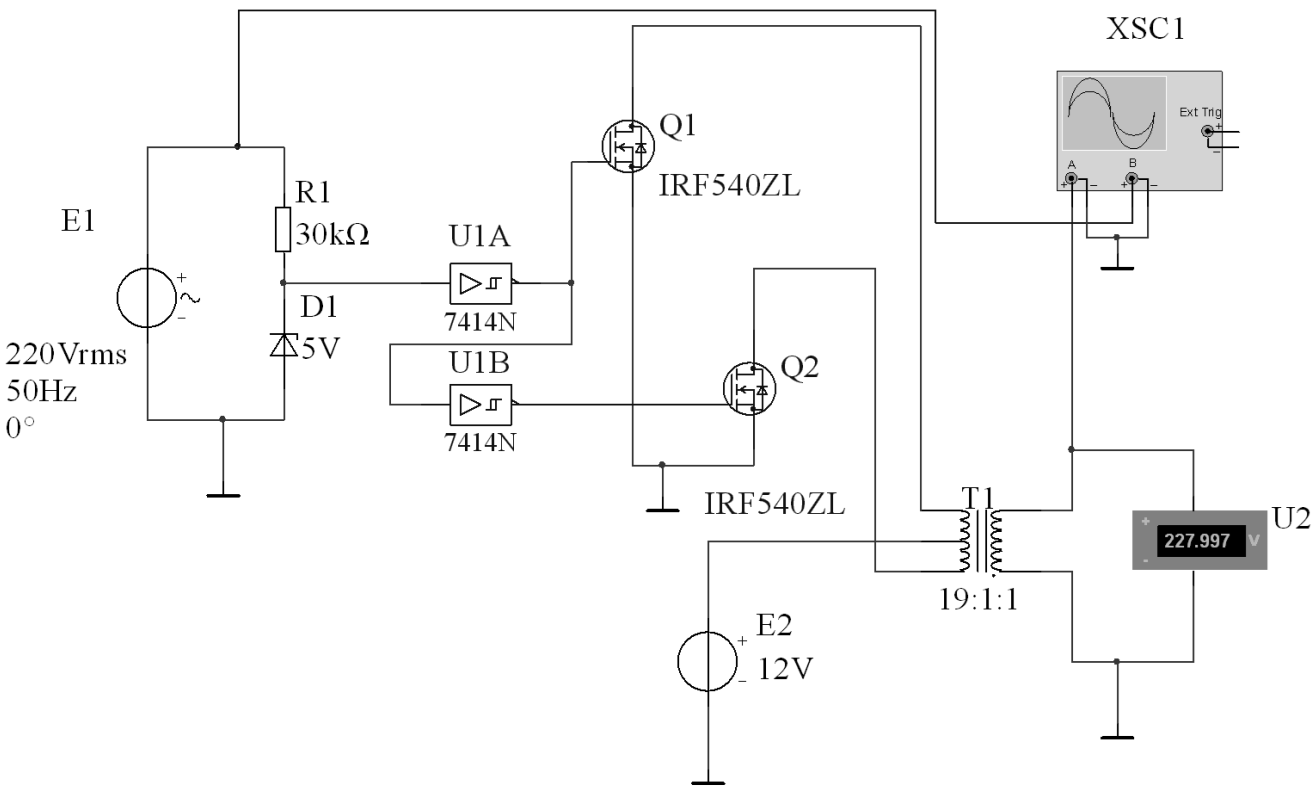

Figure 1. Basic circuit of a grid-controlled inverter.

A synchronizing device in the circuit in the figure 1 consists of load resistor R1 and voltage regulator D1 as well as two Schmitt triggers U1A and U1B. Synchronization signal going through resistor R 1 and voltage regulator D 1 creates a control signal, which is transformed by Schmitt trigger and separated

into two control signals opposite in phase with the frequency of 50 Hz, entering to transistors Q1 and Q2 (IRF540). These signals open and close transistors according to given frequency. Transistors inputs are the contact with positive potential of battery 12V, which is an accumulation buffer of electric energy generated from RES. Transistors outputs are 2 windings from three-winding T1(12V-0-12V), output winding of which generates 220V with frequency and direction given by direction and frequency of input windings operation. Thus, rotary opening of transistors given by the frequency of reference network by turns applies a current on primary windings of a transformer in opposite direction, which in the output provides a current with 220 V voltage and frequency and phase shift equal to corresponding parameters of reference network.

The proposed technical approach allows to coordinate the operation of traditional electric generator with the work of RES generator, which means that is makes it real to connect two generators of DC and AC in order to sum up their capacities in a single electric system.

In the power supply systems having several energy generation sources its parallel work for the common load must be provided. Besides, several modes are possible, when the amount of load is so decreased that there must be only one generator at work. In this case inverter has to operate without voltage in reference network.

To solve this problem, it is necessary to introduce a microcontroller into an automatic control system which will send control signals for inverting when there is no reference voltage, i.e. will provide automatic shifting of inverter from one mode (from control signal of the network) to another (microcontroller signal) or vice versa.

Thus, based on using the microprocessor devices other automation tasks of power generation and energy consumption processes in hybrid electric systems can be solved.

Conclusions

The development of RES power generation, increase in number of generating devices based on RES and consumer of this kind of energy leads to the need in autonomous electric power systems and forming a branch of high-tech electric machinery industry in the country.

Creation of electrical systems based on RES stimulates the research conducted on the operation efficiency increase through automation control of work of generating sources and reducing energy loss in all elements of the system.

The R&D product of BMSTU proposed in the article allows to coordinate the operation of traditional electric generator with the work of RES generators, which is necessary to provide a reliable work of energy consumers in autonomous electric power systems.

References

[1] Elistratov V V 2016 *Vozobnovlyaemaya energetika* (Spb.: Izd-vo Politekhn. Un-ta) 424
[2] Kol'nichenko G I, Tarlakov Ya V and Sirotov A V 2017 Lesnoy vestnik *Forestry Bulletin* **21(5)** 64-8
[3] Vasil'yev I A, Lyuminarskaya E S and Selivanov K V 2018 Hybrid energy as a way of electrifying geographically isolated consumers *Fundamental and applied problems of engineering and technology* **4-2(330)** 154-61
[4] Selivanov K V 2017 Analysis of the methods of small distributed power supply *International Journal of Research* **01(55)** 107-10