Journal of Physics: Conference Series

PAPER • **OPEN ACCESS**

Low temperature ion nitriding titanium alloy TI-6AL-4V in the coarse grained and ultrafine-grained states

To cite this article: Yu G Khusainov *et al* 2018 *J. Phys.: Conf. Ser.* **1115** 032035

IOP Conf. Series: Journal of Physics: Conf. Series **1115** (2018) 032035 doi:10.1088/1742-6596/1115/3/032035

Low temperature ion nitriding titanium alloy TI-6AL-4V in the coarse grained and ultrafine-grained states

Yu G Khusainov, R D Agzamov, K N Ramazanov, A A Nikolaev, R S Esipov, A F Tagirov and I V Zolotov

Ufa State Aviation Technical University, 12 Karl Marks Str., Ufa, 450008, Russian Federation

E-mail: esromles@mail.ru

Abstract. The paper presents the study of the influence of ion nitriding modes on the structure and mechanical properties of titanium alloy TI-6AL-4V in ultrafine-grained (UFG) state obtained via equal channel angular extrusion (ECAE). Optical images of a microstructure using scanning electron microscopy (SEM) were obtained. Microhardness testing by the depth of the modified layer was conducted.

1. Introduction

Titanium alloys are widely used construction materials in aviation and space industry. This is caused by their high strength-to-weight ratio and corrosion resistance. However, industrial application of titanium alloys is rather limited due to low wear resistance [1].

It is possible to raise the surface performance of titanium alloys by various surface modification methods, such as wearfacing, nitriding, oxidation, ion implantation, electron beam processing, etc. [2, 3]. However, the hardened surface layer in combination with relatively soft base leads to the reduction of fatigue strength. This is caused by the fact that such difference in mechanical properties leads to residual tensile stress [1]. Currently, one of the promising tendencies to increase the strength of construction materials is the intensive plastic deformation (IPD). As a result of such treatment the ultrafine-grained structure is formed in the material further increasing its strength [4, 5]. Thus, the combination of IPD and subsequent surface modification with ion nitriding will make it possible to considerably increase operational and mechanical properties of material surface. However, traditional nitriding is usually carried out under high temperatures (800-950°C) [6, 7]. Under such thermal influences the processing of titanium alloys with UFG structure is impossible due to recrystallization and subsequent growth of grains. These factors lead to the decrease in mechanical properties of the material. Therefore, ion nitriding of titanium alloy TI-6AL-4V with UFG structure at low temperatures (450-600°C) represents an urgent task.

The paper studies the influence of low-temperature ion nitriding of titanium alloy TI-6AL-4V in UFG state on material structure and mechanical properties.

2. Materials and Methods

A series of experiments to study the influence of low-temperature ion nitriding on structure, mechanical and operational properties of titanium alloy TI-6AL-4V were conducted using ELU-5M, a modified unit for surface impregnation in a vacuum (figure 1).

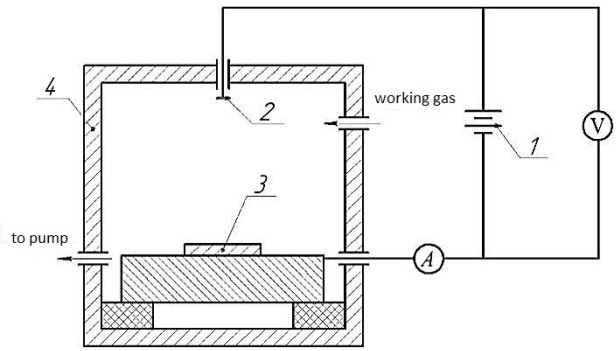

Figure 1. Scheme of ion nitriding in ELU5M: 1 – power supply; 2 – anode; 3 – sample (cathode); 4 – vacuum chamber.

Nitriding was carried out at T=450±10 °C during t=6 h. Prior to nitriding the samples were exposed to ion-beam cleaning in Ar environment.

The samples for the study were made of two-phase titanium alloy TI-6AL-4V, which is widely used in industry (annealing at 700°C).

UFG structure was obtained using equal channel angular extrusion in two modes.

During the first mode the workpiece was exposed to two cycles of extrusion at 700°C.

During the second mode the extrusion included 6 cycles at 600°C. In both cases the channel crossing angle made 120°. The scheme of extrusion is shown in figure 2 [4].

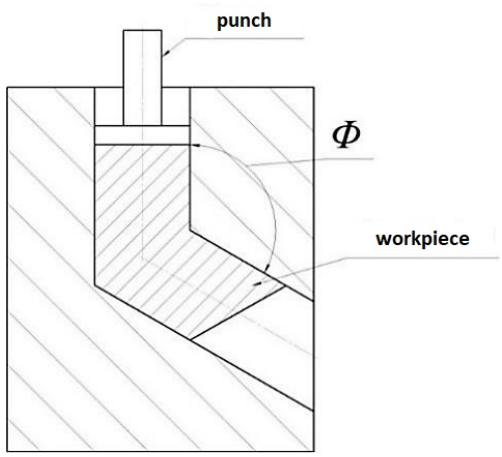

Figure 2. Scheme of ECAE [3].

Microhardness testing was carried out via the indentation method according to GOST 9450-76 using Struers Duramin-1/-2 microhardness tester. The static load applied to diamond indentor within 10 sec. made 980.7 mN (100 g).

The initial microstructure and the modified layer was studied via the scanning electron microscope *JEOL-JSM-6490 L*V. Optical images were received using the microscope *Olympus GX-51*. To define its structure, the titanium alloy was exposed to grinding etching using 10% HF – 15% HNO_3 – 75% H_20 etching agent.

3. Results and Discussion

The microstructure of TI-6AL-4V alloy in its original state (figure 3 ab) represents a mixed globular-lamellar structure consisting of coarse grains of α-phase with the average size ~10 μm and (α+β) areas with lamellar morphology with the average length of plates ~9 μm formed as a result of disintegration

of β-phase [8]. The surface microhardness of TI-6AL-4V alloy in its coarse-grained (CG) state after annealing at 700°C made 340 $HV_{0.1}$ (table 1).

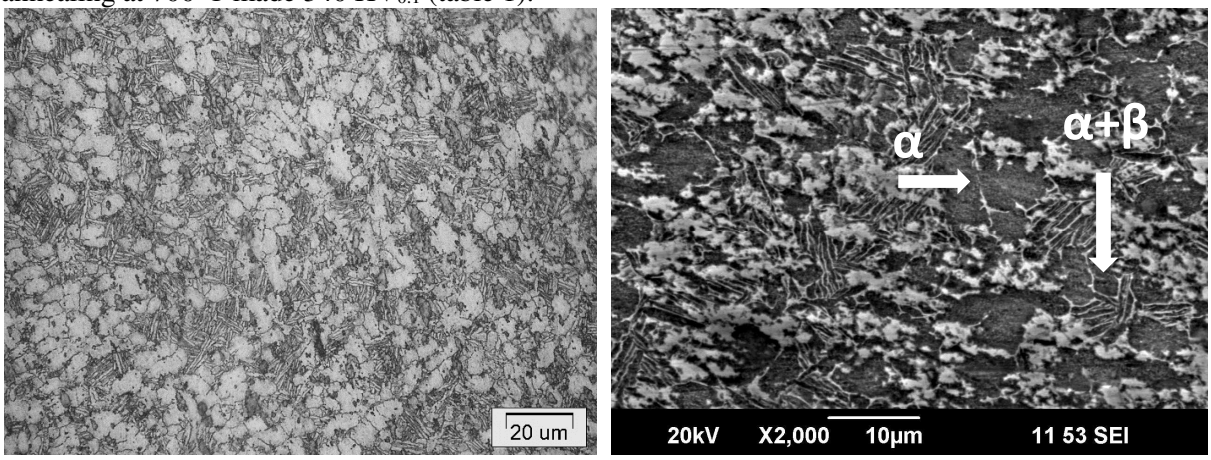

(a) (b)

Figure 3. Microstructure of TI-6AL-4V alloy in CS state after annealing at 700°C: (a) – ×100 (optical microscopy); (b) – ×2000 (SEM).

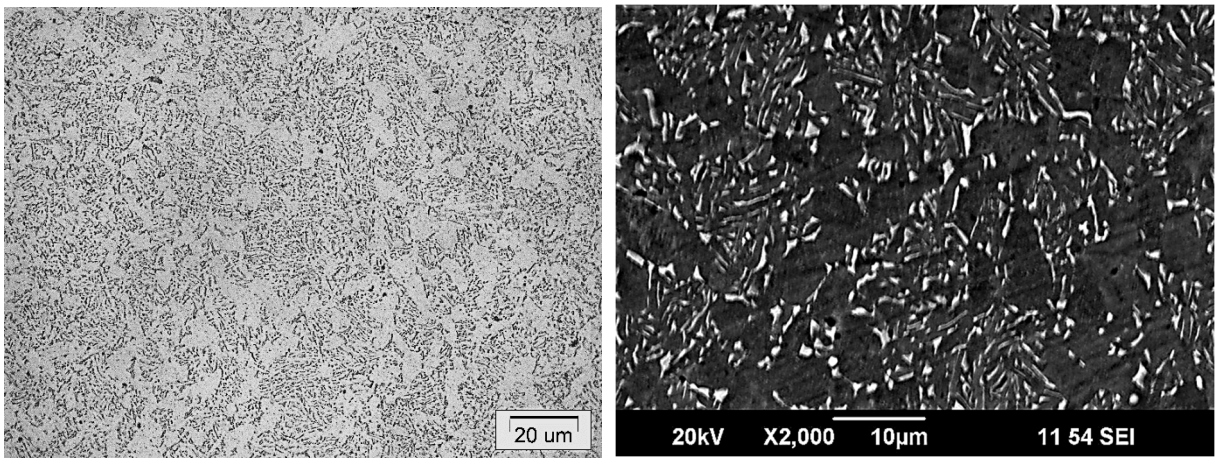

(a) (b)

Figure 4. Microstructure of TI-6AL-4V alloy in UFG state after 2 ECAE cycles: (a) – ×100 (optical microscopy); (b) – ×2000 (SEM).

After 2 ECAE cycles the fragmented structure [9] is formed in titanium alloy, original lamellar morphology is not observed in optical and SEM images (figure 4 ab). Surface microhardness made 365 $HV_{0.1}$.

After 6 ECAE cycles the microstructure of a material changed considerably and represented highly dispersed structure with coarse α-grains, lamellar morphology is not observed (figure 5). Surface microhardness after 6 extrusion cycles increased up to 395 $HV_{0.1}$.

The microstructure of samples after nitriding was not changed, nitride and diffusion layers are not optically observed (figure 6). This is likely caused by low temperature of nitriding and solid nitrogen solutions formed in titanium at this temperature that slightly change the structure. This is also mentioned in literature [10], which refers to the fact that under nitriding temperatures below polymorphic transformation the structure slightly differs from the base. In this regard it is extremely difficult to reveal the nitrated layers using optical metallography.

Surface microhardness of a sample in its CG state after ion nitriding slightly increased up to 369 $HV_{0.1}$. The sample with UFG ECAE structure (2 cycles) is also characterized by slight increase of microhardness up to 380 $HV_{0.1}$, and the surface microhardness of a sample exposed to ECAE (6 cycles) did not change. Such slight increase of microhardness is explained by low nitriding temperature and application of nitrogen-argon gas mixture.

Table 1. Surface microhardness of samples.

State	CG, $HV_{0.1}$	UFG ECAE, 2 cycles, $HV_{0.1}$	UFG ECAE, 6 cycles, $HV_{0.1}$
Original	340±20	358±20	365±20
Nitriding	369±20	380±20	395±20

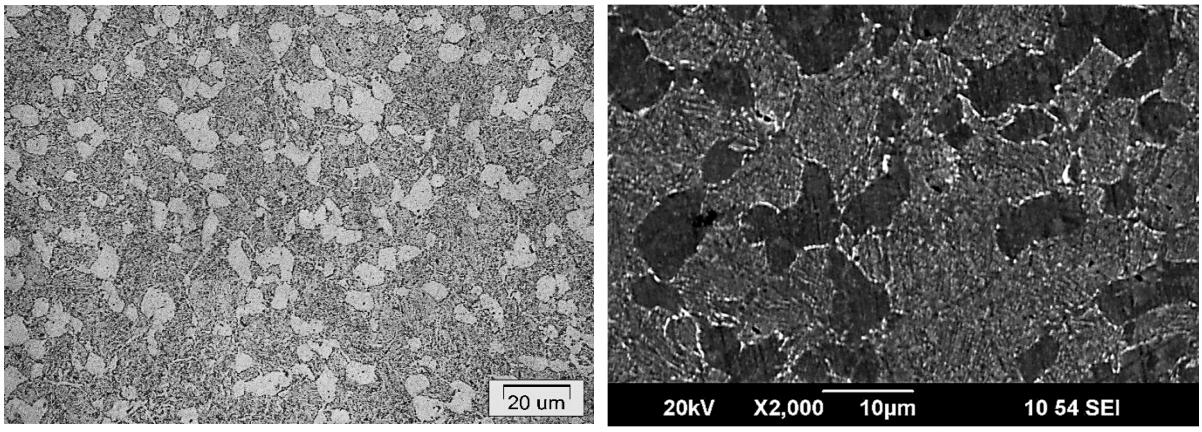

(a) (b)

Figure 5. Microstructure of TI-6AL-4V alloy in UFG state after 6 ECAE cycles:
(a) – ×100 (optical microscopy); (b) – ×2000 (SEM).

Argon ion bombardment causes the dispersion of a nitride layer, which increases the diffusion zone and hence reduces the nitride layer. It is known [10] that the hardness of a nitride layer is higher than that of the diffusive one. The distribution of microhardness by the depth of a modified layer in a sample with CG structure is almost linear, slight increase of microhardness up to the depth of ~ 17 μm is observed (figure 7).

The microhardness distribution profile of a sample with UFG structure (ECAE, 2 cycles) is more uneven. The increase in microhardness is observed up to ~23 μm (figure 7) followed by a sharp drop in values up to the level below the base, softening of a material base due to stress relaxation caused by thermal influences is supposed.

Softening of a material base is observed in the sample with UFG structure (ECAE, 6 cycles), the nature of distribution is even, and smooth transition from the hardening zone (up to 10 μm) towards the base is observed (figure 7). The insignificant softening of a material base most likely happened due to the formation of a more fine-grained structure with a large amount of defects and stresses after 6 cycles [9]. Therefore, thermal influence and argon ion bombardment of a surface led to more intensive stress relaxation and redistribution of defects within the structure. In this regard, the analysis of the schedule of microhardness distribution for UFG state exposed to ECAE 6 cycles does not provide accurate information on the existence of the hardened zone in the surface layer.

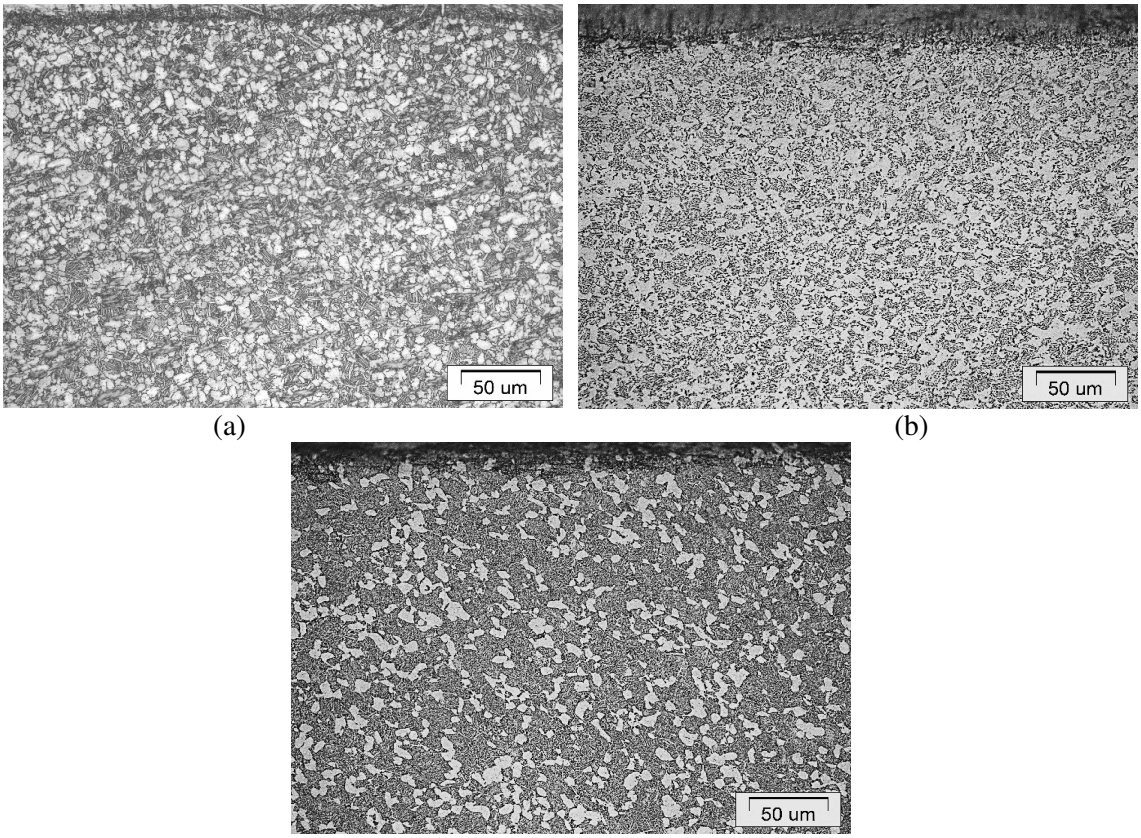

(a) (b) (c)

Figure 6. Optical images of TI-6AL-4V alloy microstructure after nitriding at 450 °C in various structural states: (a) – ×50 CG; (b) – ×50 UFG ECAE, 2 cycles; (c) – ×50 UFG ECAE, 6 cycles.

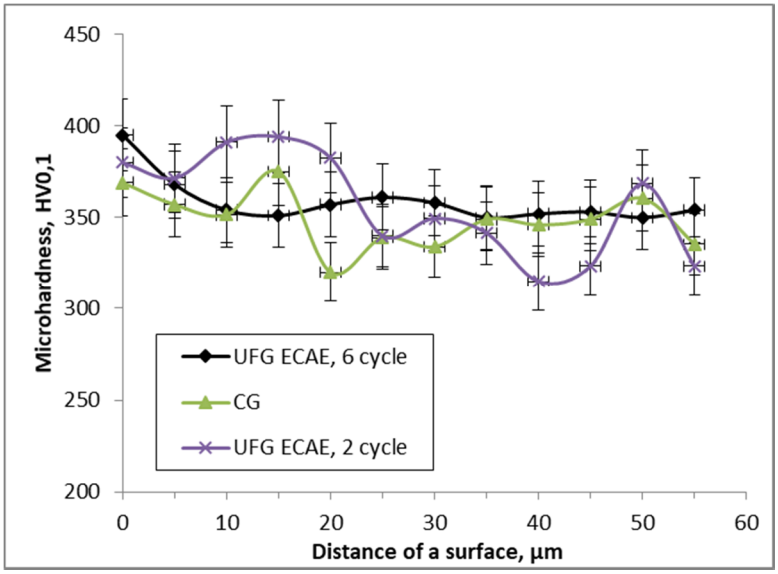

Figure 7. Distribution of microhardness by depth of a modified layer.

4. Conclusion

The study of the influence of low-temperature ion nitriding on structure, mechanical and operational properties of titanium alloy TI-6AL-4V in UFG state obtained via ECAE method led to the following conclusions:

1. Metallographical tests did not reveal obvious changes in microstructure after ion nitriding due to low temperature of nitriding, which was below the polymorphic transformation point. The sample with CG structure is characterized by a mixed globular-lamellar structure consisting of coarse original grains of α-phase with the average size ~10 μm and (α+β) areas with lamellar morphology with the average length of plates ~9 μm formed as a result of disintegration of β-phase. The sample with UFG structure (ECAE, 2 cycles) has fragmented structure. After 6 ECAE cycles the microstructure of a material changed considerably and represented fine structure with large α-grains, lamellar morphology is not observed.
2. The surface microhardness of a sample in CG state after ion nitriding slightly increased up to 369 $HV_{0.1}$. The samples with UFG ECAE structure (2 and 6 cycles) are also characterized by slight increase of microhardness up to 380 $HV_{0.1}$, and the surface microhardness of a sample exposed to ECAE (6 cycles) increased up to 395 $HV_{0.1}$. Slight increase of microhardness is explained by low nitriding temperature and application of nitrogen-argon gas mixture. The distribution of microhardness by the depth of a modified layer in a sample with CG structure is almost linear, slight increase of microhardness up to the depth of ~17 μm is observed. The microhardness distribution profile of a sample with UFG structure (ECAE, 2 cycles) is more uneven. The increase in microhardness is observed up to ~23 μm. Insignificant softening of material base is observed in samples with UFG structure (ECAE, 2 and 6 cycles). This is caused by thermal impact on UFG structure with subsequent stress relaxation and growth of grains. The pattern of microhardness distribution in a sample with UFG state (ECAE, 6 cycles) is linear without the hardening zone.

5. References

[1] Farokhzadeh K, Qian J and Edrisy A 2014 *Mater. Sci. Eng. A.* **589** 199
[2] Nolan D, Huang S, W Leskovsek V and Braun S 2006 *Surf. Coat. Technol.* **200** 5698
[3] Ivanov Y, Alsaraeva K, Gromov V, Konovalov S and Semina O 2015 *Materials Science and Technology* **31** 1523
[4] Valiev R Z and Alexandrov I V 2007 Bulk nanostructured metallic materials *IKTs "Akademkniga"* 398
[5] Danilov V, Konovalov S, Zhuravleva S, Zuev L and Gromov V 2005 *Techn. Phys.* **50** 376
[6] Budilov V, Ramazanov K, Zolotov I, Khusainov Y and Vardanyan E 2017 *J. Phys.: Conf. Ser.* **830**
[7] Ramazanov K, Zolotov I, Khusainov Y and Khusnutdinov R 2015 *J. Phys.: Conf. Ser.* **652**
[8] Kolobov Yu, Golosov E and Ratochka I 2008 *Questions of Material Science* **2** 43
[9] Belyi A, Kononov A, Kopylov V and Sharkeev Yu 2008 *Journal of Friction and Wear* **29** 571
[10] Arzamasov B, Bratuhin A, Eliseev YU and Panajoti T 1999 Ion chemical heat treatment of alloy*s Bauman MSTU* 400