IOP Conference Series: Materials Science and Engineering

PAPER • **OPEN ACCESS**

The mechanical mounder technological parameters justification

To cite this article: A M Tsypouk *et al* 2020 *IOP Conf. Ser.: Mater. Sci. Eng.* **919** 062047

The mechanical mounder technological parameters justification

A M Tsypouk, A V Rodionov and L P Pekki

Petrozavodsk State University, 33, Lenin avenue, Petrozavodsk, 185910, Russian Federation

E-mail: andrey.rodionov@mail.ru

Abstract. For intensive reforestation, machines should be used that will not only reduce the time and labour required for artificial reforestation, but also reduce the need for subsequent young stand treatment (early tending and early pre-commercial thinning). These machines include machines for creating the humus mounds with mineral soil cover - for example a domestic rotary tool ORM-1.5 or its foreign counterparts - a two-row mounder of the Bracke M24.a type and a three-row mounder of the Bracke M36.b type. Petrozavodsk State University (PetrSU) has developed the design of a new two-row forestry machine for creating humus mounds with mineral soil cover - the mechanical mounder MK-2 (RF patent No. 141061, IPC A01G 23/00). The paper discusses the methodology for calculating the main technological parameters of the MK-2 mechanical mounder machine: the mounder machine rotors angular velocity, the mounds and depressions parameters formed by the mounder rotors (height, depth and length); the gear ratio between the power take-off shaft of the tractor and the mounder rotors' value. The calculations established that the main design parameter of mounder MK-2 – the rotor rotation speed – must be four times less than the forestry unit translational speed (tractor + mounder) to achieve a common step in the mounds preparation about 1.2 m. The developed machine further studies (the MK-2 mounder) are recommended in the following directions: the MK-2 mounder design parameters refinement based on the testing prototype results in the field; technology development for the MK-2 mounder rational use for reforestation.

1. Introduction

In Russia, a transition is underway from "extensive model" of forest management, which implies a simplified procedure in the forest (only a mature forest felling and subsequent reforestation) to an "intensive model" of forest management, which provides for activities' series in forest areas - a mature forest felling, reforestation, thinning, etc. [1].

According to the Scandinavian countries (Finland, Sweden, etc.) experience, intensive forest cultivation will require a significant (4-6 times) increase in the work volume on artificial reforestation (planting, sowing) and tending for the target tree species young growth.

To achieve these goals, the Russian forestry needs not only high-quality sowing and planting material but also domestic efficient equipment for soil preparation mechanization during reforestation.

In such conditions, machines should be used that will not only reduce the time and labour spent on artificial reforestation but also reduce the need for subsequent young stand treatment (early tending and early pre-commercial thinning). According to [2, 3], such machines include machines for creating the humus mounds with mineral soil cover. Various specialized machines can be used to create such

mounds, for example the domestic rotary tool ORM-1.5 [4] or its foreign counterparts - a two-row mounder of the Bracke M24. type and a three-row mounder of the Bracke M36.b type [5, 6].

2. The object

Petrozavodsk State University (PetrSU) has developed the design of a new two-row forestry machine for creating humus mounds with mineral soil cover - the MK-2 mounder (figure 1). The new design received a patent for a utility model of the Russian Federation No. 141061 dated 06.08.2013. (authors: Tsypouk A. M., Chechkov A. A., Sokolov A. I.; patentee-PetrSU) [7].

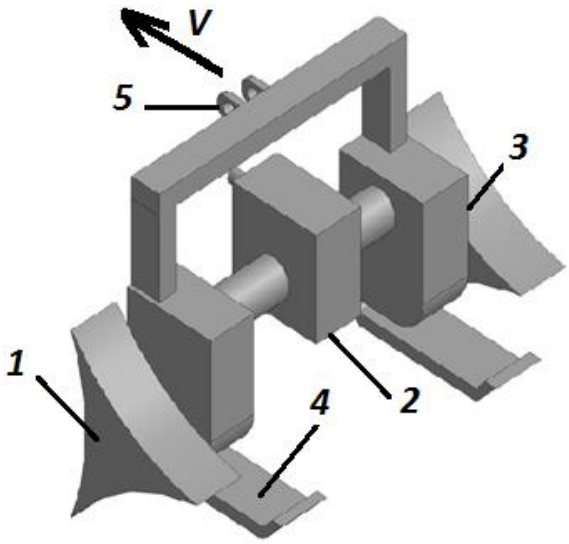

Figure 1. The MK-2 mounder general view (3D-model) [8]. 1 - rotor (left); 2 - reducer; 3 - skeleton; 4 - support ski (left); 5 - tractor coupling device.

The MK-2 mounder main purpose is to create the humus mounds with mineral soil cover during the forestry unit continuous movement based on a caterpillar or wheeled tractor (including a forwarder) equipped with a rear-hinged system, a mechanical power take-off shaft or a hydraulic motor.

The MK-2 mounder includes a frame with a central gearbox and a self-braking transmission, two onboard single-stage cylindrical gearboxes, a hitch for connecting to a tractor, two impellers (rotors), two ski-like skids. The machine is equipped with a device for mounds and depressions formation trajectory programming with a predetermined step, which is made in the form of a mechanical self-braking transmission from the tractor power take-off shaft to rotors, which are mounted on the final drives driven shafts, and the gear ratio between the tractor power take-off shaft and the side single-stage cylindrical shafts gearboxes on which the rotors are fixed is in the range of 30...51 with the blades' number on the rotor at least 3 pieces. With an arbitrary blades number, the gear ratio is defined as a value that is directly proportional to a mounds preparation given step, the blades' number on the rotor, the rotational speed of the power take-off shaft and is inversely proportional to the forward speed of the tractor [7, 8].

The MK-2 mounder works as follows. When the tractor with the machine attached to it moves through the felling site, the vane rotors rotate with the braking effect, cutting the working blades into the soil, due to the tractor's traction force, the mounds is cut out with the blade deepening. The rotor is deepened until it overcomes the lower extreme point, then the rotor blade rises. Along with this, the soil layer rises and turns over, which falls on the edge of the depression in the movement course followed by its pressing by the rotor blade. At this point, the formation of mound ends, then the next blade cuts into the soil and the process of creating a mound with a given step is repeated.

The trajectory of each end of the beam is described by a trochoid (the cycloidal type curve), which (in a parametric form) is described by the equations given for the milling tool [9].

To change the distance between mounds upward, the operator must shift the tractor gearbox one step higher, and, conversely, to decrease this distance, shift to a lower gear. The change in step occurs due

to the change in the tractor speed at a constant angular speed of the rear power take-off shaft, therefore, at a constant rotor speed [7, 8].

The MK-2 mounder is devoid of the disadvantages that it's domestic analogue ORM-1.5 has [4], since it does not need to readjust brake systems to work on different soil types. The MK-2 mounder is equipped with a simple mechanical device for programming the mounds formation trajectory in the soil, which reliability is higher than the electronically controlled hydraulic drive used on the imported analogue of the Bracke M24. type [5].

The MK-2 mounder main advantages:

- in comparison with the ORM-1.5 machine, there is no working bodies (blades) brakes adjustment, the mounds size constancy;
- in comparison with cultivators for discrete mounds (mounders) such as Bracke M25.a and Bracke M36.a - working bodies drive simple and reliable design, reliable operation, low cost;
- compared to excavators with a bucket designed for making mounds [6] – high performance, due to continuous movement through the cutting site, simple design, low cost.

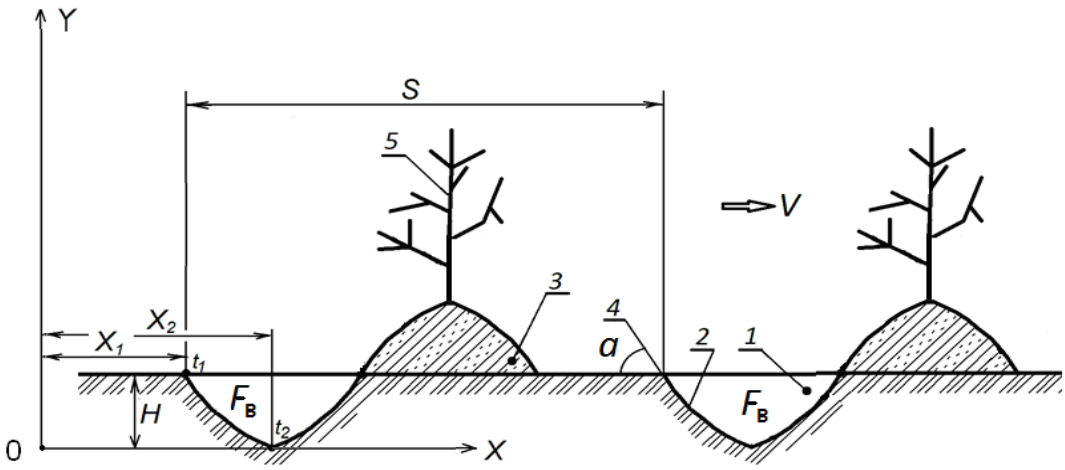

Figure 2. The MK-2 mounder soil cultivation scheme. *1* - hole; *2* - the hole transverse wall; *3* - micro-elevation (mound); *4* - tangent; *5* - a plant planted in a micro-elevation; α- the hole tr ansverse wall inclination angle to the horizon; F_B - the hole sidewall area; S - step for preparing holes; t_1 - is a point on the trajectory corresponding to the moment the end of the rotor beam enters the soil; t_2 - the trajectory point that corresponds to the beam reaching the bottom of the hole; $H = Y_1$ - hole depth; X_1 and X_2 – abscissas.

3. Research methods

The basic technological parameters of the MK-2 mounder [7, 8] include:

- the mounder rotors rotation speed, at which the optimum distance between mounds of 0.8...1.2 m will be achieved. It is determined to depend on the tractor forward movement speed with which the mounder is aggregated;
- parameters of micro-elevations (mounds) and depressions formed by the mounder rotors (height, depth and length). These parameters are set by the rotors parts' dimensions interacting with the soil;
- the gear ratio value between the tractor power take-off shaft and the mounder rotors. Determined by kinematic calculation.

4. Research results

At the Petrozavodsk State University (PetrSU), on the [9–11] basis, a method for calculating the technological the MK-2 mounder parameters has been developed.
Initial calculating parameters - see table 1.

Table 1. Initial calculating parameters.

Parameter	Designation	Example	Dimensionality
Tractor speed	V	0.6944	m/s
Power take-off shaft rotation frequency	n_{vom}	2.4304	r/s
Tractor weight	m_{tr}	3 900.00	kg
Beams rotor radius at the ends	R	0.75	m
Number of beams on the rotor	Z	4	pcs.
Rotor beam width (i.e. hole width)	B	0.40	m
Mounder mass	m_m	600.00	kg
Rotor braking ratio	k	0.70	–
Soil surface ray path first intersection point height (from the reference beginning)	Y_1	0.30	m
Hole bottom ray path first intersection point height (from the reference beginning)	Y_2	0.00	m
Soil shear resistivity	$[\tau_{sd}]$	26 000.00	N/m^2
Soil resistivity to crushing	$[\sigma_{cm}]$	280 000.00	N/m^2
Soil density	ρ	1 900.00	kg/m^3
Soil-soil friction coefficient	f_{tr1}	0.37	–
Friction coefficient "steel-soil"	f_{tr2}	0.27	–
Tractor movement resistance coefficient	f_{per}	0.15	–

4.1. The rotor movement geometric parameters calculation is performed in the following sequence.

Rotor angular velocity ω, rad/s

$$\omega = k \cdot \frac{V}{R} \tag{1}$$

Rotor rotation frequency n, r/s

$$n = \frac{\omega}{2 \cdot \pi} \tag{2}$$

Distance between adjacent holes S, m

$$S = \frac{V}{n \cdot Z} \tag{3}$$

Time instant of the first beam path crossing the soil surface t_1, s

$$t_1 = \frac{arc\sin\left(1 - \frac{Y_1}{R}\right)}{\omega} \tag{4}$$

Distance from the reference beginning to the point of the soil surface ray path first intersection X_1, m

$$X_1 = V \cdot t_1 + R \cdot \cos(\omega \cdot t_1) \tag{5}$$

Hole bottom first intersection time by the ray path t_2, s

$$t_2 = \frac{arc\ \sin\left(1-\frac{Y_2}{R}\right)}{\omega} \tag{6}$$

Distance from the reference beginning to the soil surface ray path first intersection point X_2, m

$$X_2 = V \cdot t_2 + R \cdot \cos(\omega \cdot t_2) \tag{7}$$

Hole full length at the top L, m

$$L = (X_2 - X_1) \cdot 2 \tag{8}$$

Full rotor revolution time T, s

$$T = \frac{2 \cdot \pi}{\omega} \tag{9}$$

Distance the rotor travels during a full revolution Q, m

$$Q = T \cdot V \tag{10}$$

4.2. The hole lateral surface area calculation is performed in the following sequence.
First integral for area calculation, F_1, m^2

$$F_1 = R \cdot \int_{t_1}^{t_2} \left[\left(V + \frac{1}{2} \cdot R \cdot \omega\right)\right] \cdot dt = R \cdot \left(V + \frac{1}{2} \cdot R \cdot \omega\right) \cdot t\Big|_{t_1}^{t_2}$$
$$F_1 = R \cdot \left(V + \frac{1}{2} \cdot R \cdot \omega\right) \cdot (t_2 - t_1) \tag{11}$$

Second integral for area calculation, F_2, m^2

$$F_2 = -R \cdot \int_{t_1}^{t_2} [(V + R \cdot \omega) \cdot \sin(\omega \cdot t)] \cdot dt = R \cdot (V + R \cdot \omega) \cdot \frac{\cos(\omega \cdot t)}{\omega}\Big|_{t_1}^{t_2}$$
$$F_2 = \frac{R \cdot (V + R \cdot \omega)}{\omega} \cdot [\cos(\omega \cdot t_2) - \cos(\omega \cdot t_1)] \tag{12}$$

Third integral for area calculation, F_3, m^2

$$F_3 = -\frac{1}{2} \cdot R \cdot R \cdot \omega \cdot \int_{t_1}^{t_2} \cos(2 \cdot \omega \cdot t) \cdot dt = -\frac{1}{4} \cdot R^2 \cdot \sin(2 \cdot \omega \cdot t)\Big|_{t_1}^{t_2}$$
$$F_3 = -\frac{R^2}{4} \cdot [\sin(2 \cdot \omega \cdot t_2) - \sin(2 \cdot \omega \cdot t_1)] \tag{13}$$

The sum of three integrals for calculating the area, F_E, m^2 (see formulas p. 11, 12, 13)

$$F_E = F_1 + F_2 + F_3 \tag{14}$$

The values of *cos* and *sin* of the angle in formulas 12 and 13 should be substituted in radians!
Hole lateral surface area F_B, m^2

$$F_B = 2 \cdot [(X_2 - X_1) \cdot Y_1 - F_E] \tag{15}$$

4.3. A hole's some geometric parameters approximate calculations made in the following sequence.
Hole transverse wall inclination approximate angle in the longitudinal plane, α, deg

$$\alpha = arc\tan\left(\frac{Y_1}{X_2 - X_1}\right) \tag{16}$$

Hole wall transverse approximate length, L_g, m

$$L_g = \sqrt{(Y_1)^2 + (X_2 - X_1)^2} \tag{17}$$

The hole transverse wall exact length, L_g, m can be found using the integral:

$$L_g = \int_{t_1}^{t_2} \sqrt{(Y_t')^2 + (X_t')^2} \cdot dt$$

$$X_t' = V - R \cdot \omega \cdot \sin(\omega \cdot t)$$

$$Y_t' = -R \cdot \omega \cdot \cos(\omega \cdot t)$$

This integral is solved by an approximate method. For practical calculations, it is enough to use formula 17 to calculate the hole transverse wall approximate length.

4.4. Energy indicators are calculated in the following sequence.
Resistance to soil shear along the hole transverse wall, P_{sd}, N

$$P_{sd} = [\tau_{sd}] \cdot (B \cdot L_g) \tag{18}$$

Total pressure force on the soil prism side walls, P_n, N

$$P_n = [\sigma_{sm}] \cdot 2 \cdot F_B \tag{19}$$

Friction force along the soil prism lower edge and on the side walls compressed by internal pressure, P_{tr}, N

$$P_{tr} = [(F_B \cdot B \cdot \rho \cdot g) + P_n] \cdot f_{tr1} \tag{20}$$

Dynamic additive, P_d, N

$$P_d = \frac{\rho \cdot Y_1 \cdot B \cdot V^2}{2} \tag{21}$$

Hole formation total force (excluding soil movement on the surface), P, N

$$P = P_{sd} + P_{tr} + P_d \tag{22}$$

Hole formation total force horizontal component, P_g, N

$$P_g = P \cdot \cos\alpha \tag{23}$$

Hole formation total force vertical component, P_v, N

$$P_v = P \cdot \sin\alpha \tag{24}$$

Power for soil prism horizontal (linear) movement, N_g, W

$$N_g = P_g \cdot V \tag{25}$$

Power for soil prism vertical movement (lifting from the hole), N_v, W

$$N_v = P_v \cdot \omega \cdot R \tag{26}$$

Power to move the mounder, N_{per}, W

$$N_{per} = m_m \cdot g \cdot f_{tr2} \cdot V \tag{27}$$

Total power required for the double-row mounder operation on the horizontal section, N_{total}, W

$$N_{total} = N_{per} + 2 \cdot N_g + 2 \cdot N_v \tag{28}$$

Power required to move the tractor, N_{tr}, W

$$N_{tr} = m_{tr} \cdot g \cdot f_{per} \cdot V \tag{29}$$

Power required for the forestry unit operation (tractor + mounder), N_{cons}, W

$$N_{cons} = N_{total} + N_{tr} \tag{30}$$

The calculation results according to the proposed method - see table 2.

Table 2. Calculation results.

Parameter	Designation	Example	Dimensionality
Rotor angular velocity	ω	0.6481	rad/s
Rotor rotation frequency	n	0.1032	r/s
Distance between adjacent holes	S	1.6830	m
Time instant of the first beam path crossing the soil surface	t_1	0.9929	c
Distance from the reference beginning to the point of the soil surface ray path first intersection	X_1	1.2895	m
Hole bottom first intersection time by the ray path	t_2	2.4237	c
Distance from the reference beginning to the soil surface ray path first intersection point	X_2	1.6830	m
Hole full length at the top	L	0.7871	m
Full rotor revolution time	T	9.6947	c
Distance the rotor travels during a full revolution	Q	6.7320	m
First integral for area calculation	F_1	1.0060	m^2
Second integral for area calculation	F_2	-1.0929	m^2
Third integral for area calculation	F_3	0.1350	m^2
Three integrals sum to calculate the area	F_E	0.0481	m^2
Hole lateral surface area	F_B	0.1399	m^2
Hole transverse wall inclination approximate angle in the longitudinal plane	α	37.3193	degree
Hole wall transverse approximate length	L_g	0.4948	m
Resistance to soil shear along the hole transverse wall	P_{sd}	5146.33	N
Total pressure force on the soil prism side walls	P_n	78362.68	N
Friction force along the soil prism lower edge and on the side walls compressed by internal pressure	P_{tr}	29380.21	N
Dynamic additive	P_d	54.97	N
Hole formation total force (excluding soil movement on the surface)	P	34581.51	N
Hole formation total force horizontal component	P_g	27501.60	N
Hole formation total force vertical component	P_v	20965.28	N
Power for soil prism horizontal (linear) movement	N_g	19097.11	W
Power for soil prism vertical movement (lifting from the hole)	N_v	10190.81	W
Power to move the mounder	N_{per}	1103.56	W
Total power required for the double-row mounder operation on the horizontal section	N_{total}	59679.38	W
Power required to move the tractor	N_{tr}	3985.06	W
Power required for the forestry unit operation (tractor + mounder)	N_{cons}	63664.44	W

5. Discussion

To facilitate the MK2 mounder technological parameters calculation, PetrSU developed a specialized computer program (authors: Tsypouk A. M., Rodionov A. V., Pekki L. P., Fedorov A. A.). The program works in the Windows 7-10 environment (figure 3), has two modes [12]:

- interactive - user enters data for calculations;
- non-interactive - data for calculations is taken from the data file.

The results are displayed on a computer screen and can be analyzed by the user before printing or saving in a calculation results file.

The program allows to perform following calculations of the MK-2 mounder technological parameters:

- rotor movement geometrical parameters' calculation - angular velocity and the mounder rotor rotation speed, the distance between adjacent mounds, etc.;
- hole lateral surface area calculation;
- hole geometrical parameters' calculation - hole transverse wall inclination angle, hole wall transverse length;
- energy indicators calculation - soil resistance during the mounds' formation, the total force for digging out the soil from the holes, the power for the mounds ' formation and the forestry unit movement.

The computer program is used by the authors' team to substantiate the MK-2 mounder optimal technological parameters.

As a result of the MK-2 mounder technological parameters calculations according to the proposed method using the program [12] established that the MK-2 mounder main design parameter – the rotor rotation speed – must be four times less than the forestry unit (tractor + mounder) translational speed to achieve the generally accepted step of preparing mounds of about 1.2 m. This is important for the production of the prototype and its testing success.

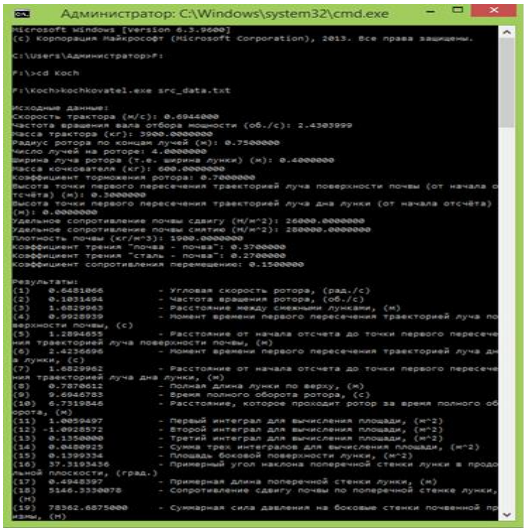

Figure 3. The program window «Mounder technological calculation» [12].

6. Conclusion

At present, PetrSU has developed a methodology for calculating the technological parameters of the MK-2 mounder and a set of design documentation that allows manufacturing a prototype machine.

Further research to improve the design of the developed machine is recommended in the following directions:

- the MK-2 mounder design parameters refinement based on the testing prototype results in the field;
- an MK-2 mounder rational use technology development for reforestation in felling sites, with the regulatory documentation (technological maps, production rates, etc.) development.

References

[1] 2015 *The Concept of Intensive Use and Forests Reproduction* (St. Petersburg, Russia: FBU "SPbNIILH") p 20
[2] Saksa T, Miina J, Haatainen H and Kärkkäinen K 2018 Quality of spot mounding performed by continuously advancing mounders *Silva Fennica* **52(2)** 13 *https://doi.org/10.14214/sf.9933*
[3] Saksa T, Miina J and Uotila K 2016 *Taimikonhoito - Tavoitteet, Menetelmät ja Kustannukset Metsäkustannus* (Jelgava, Latvia: Paino Jelgava Printing House) p 128
[4] Eremin E V 1988 *Rotary Unit ORM-1,5: Passport* (Leningrad, USSR: LenNIILKh) p 23
[5] Mounders Bracke Forest AB https://www.brackeforest.com/products/mounders last accessed: 2020/07/20
[6] Kukkonen E and Kukkonen M 2014 *Forestry Works Mechanization: a Tutorial* (Joensuu, Finland: Grano Oy, Mikkeli) p 46
[7] Tsypouk A M, Chechkov A A and Sokolov A I declared 08/06/2013; publ. 05/27/2014 (Pat. 141061 RF, IPC A01G 23/00, A Machine for Creating Spot Mounds in Soil applicant and patentee PetrSU) **2013136719/13** Bul. **15(2)**
[8] Tsypouk A M, RodionovA V and Chechkov A A 2015 A new mechanical mounder machine for soil cultivation in felling sites *Lesprominform* **4** 44-6
[9] Aleksandrov V A, Kozmin S F, Shol' N R and Aleksandrov A V 2012 *Mechanization of Forestry and Landscape Gardening: Textbook* (St. Petersburg, Russia: Publishing house "Lan"') p 528
[10] Baranenkov G S, Demidovich B P, Efimenko V A and others 2002 *Problems and Exercises in Mathematical Analysis for Higher Education Institutions: Tutorial* ed B P Demidovich (Moscow, Russia: Astrel Publishing House LLC) p 495
[11] Tsypouk A M and Kozmin S F 2018 Substantiation of the dynamic component to the rational formula of Academician Goryachkin V P *Actual directions of scientific research of the XXI century: Theory and practiceVoronezh: UOP FGBOU VO VGLTU* **4(40) 6(4)** 20919
[12] Tsypouk A M, Rodionov A V, Pekki L P and Fedorov A A declared 05/19/2020; register June 17, 2020 *Technological Calculation of the Mounder* (Certificate of state registration of the computer program 2020616411 the Russian Federation) **2020614962** 1