Journal of Physics: Conference Series

OPEN ACCESS

Characteristic Analysis of DC Electric Railway Systems with Superconducting Power Cables Connecting Power Substations

To cite this article: H Ohsaki *et al* 2014 *J. Phys.: Conf. Ser.* **507** 032035

View the article online for updates and enhancements.

You may also like

- Bibliometric review of emerging technologies in Gas Insulated Substations SF6
K Y Gómez-Sandoval, I A Marriaga-Márquez, J I Silva-Ortega et al.

- Can distribution grid infrastructure accommodate residential electrification and electric vehicle adoption in Northern California?
Salma Elmallah, Anna M Brockway and Duncan Callaway

- Study on the Difference of Lightning Impact on Intelligent Substation and Conventional Substation
Yan Xie, Mu Li and Shengwu Kang

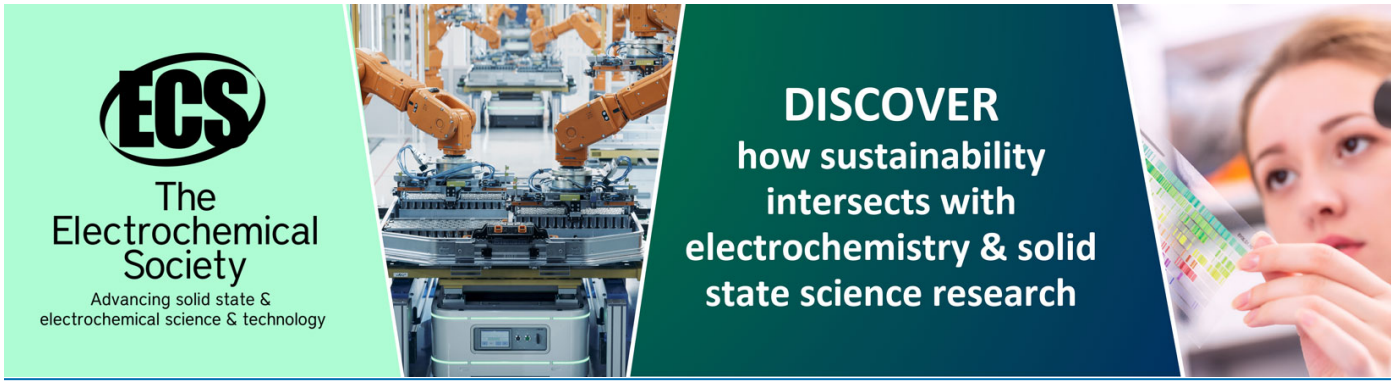

This content was downloaded from IP address 3.144.35.148 on 26/04/2024 at 12:24

Characteristic Analysis of DC Electric Railway Systems with Superconducting Power Cables Connecting Power Substations

H Ohsaki[1,2], N Matsushita[2], T Koseki[2] and M Tomita[3]

[1] Department of Advanced Energy, Graduate School of Frontier Sciences, The University of Tokyo, Kashiwa 277-8561, Japan
[2] Department of Electrical Engineering and Information Systems, School of Engineering, The University of Tokyo, Hongo, Tokyo 113-8656, Japan
[3] Railway Technical Research Institite, Kokubunji, Tokyo 185-8540, Japan

E-mail: ohsaki@k.u-tokyo.ac.jp

Abstract. The application of superconducting power cables to DC electric railway systems has been studied. It could leads to an effective use of regenerative brake, improved energy efficiency, effective load sharing among the substations, etc. In this study, an electric circuit model of a DC feeding system is built and numerical simulation is carried out using MATLAB-Simulink software. A modified electric circuit model with an AC power grid connection taken into account is also created to simulate the influence of the grid connection. The analyses have proved that a certain amount of energy can be conserved by introducing superconducting cables, and that electric load distribution and concentration among the substations depend on the substation output voltage distribution.

1. Introduction

In conventional electric railways, a DC feeding system is widely used, especially in railway lines with dense train traffic. However, the DC feeding system has some essential problems due to its low feeding voltage. The problems are a relatively lower efficiency of power transmission, a larger voltage drop along the feeder, the regenerative braking cancellation, a large number of substations along the line, etc. We consider that the introduction of superconducting cables could be a solution to them [1-3].

By laying superconducting cables along the feeder in parallel and connecting them to the railway substations and, in some cases, to several points of the feeder, a voltage change along the feeder can be significantly reduced. This allows the trains to use more a regenerative braking system, thus improving energy efficiency of the whole system. Furthermore, the use of superconducting cables would enable effective load sharing among the substations. The substations have less peak power and can be designed to have a smaller capacity. It leads to a less expensive design of the substations and, as a result, a less expensive DC electric feeding system.

This paper focuses on analysis of the energy conservation and the levelling of load distribution among the substations by introducing superconducting cables.

2. Analysis method

A model railway line was first set up, on which the feasibility of introducing superconducting cables are to be evaluated. Then, an electric circuit model of the railway line was built based. The circuit model includes trains, substations, feeders, superconducting cables, and, if necessary, transmission lines on the grid side. Using the electric circuit model and MATLAB-Simulink software, the current and voltage distributions in the circuit, and electric energy flows in the system were analysed [2].

Content from this work may be used under the terms of the Creative Commons Attribution 3.0 licence. Any further distribution of this work must maintain attribution to the author(s) and the title of the work, journal citation and DOI.
Published under licence by IOP Publishing Ltd

2.1. A model railway line

Figure 1 shows a schematic view of the model railway line used in this study. It is a double-tracked line of 26.5 km and with 24 stations. On each of its inbound and outbound lines, trains are operated so as to depart at each station in a five-minute interval, which means that the same train operation pattern is repeated every five minutes. Consequently, simulations are conducted for a certain five-minute period.

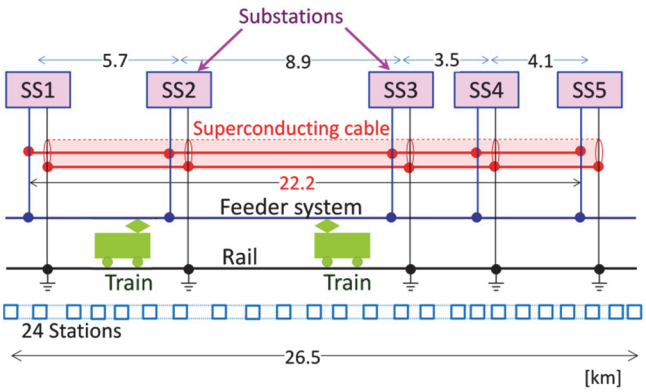

Figure 1. Schematic view of a model railway line.

In a conventional double-tracked feeder system, even if trains on both inbound and outbound lines are operated in the same interval, the amount of energy consumption may be changed just by changing time shift between the operation plans of these two lines. In order to clarify the effect of introducing superconducting cables alone, the simulation was conducted for 300 patterns of the "time shift". Superconducting cables are introduced so as to interconnect the output buses of adjacent substations.

2.2. An electric circuit model

Figure 2 shows schematic views of two electric circuit models used in the analysis. They consist of four parts: substations, feeders, trains, and superconducting cables. The substation model includes a diode. This represents a silicon diode rectifier commonly used in railway substations. In Model B shown in figure 2 (b), all substations are connected to a circuit equivalent to an AC power grid that supplies power to the substations. If the electric utility substation is located farther or a power distribution line has a larger electric resistance, the voltage drops becomes larger at the input and also the output of the railway substations. In addition, the voltages of the railway substations depend on the locations.

The train models are set to consume or regenerate certain amount of electric power, depending of its velocity and acceleration conditions. Electric resistance R_f on the feeder side changes with a train running.

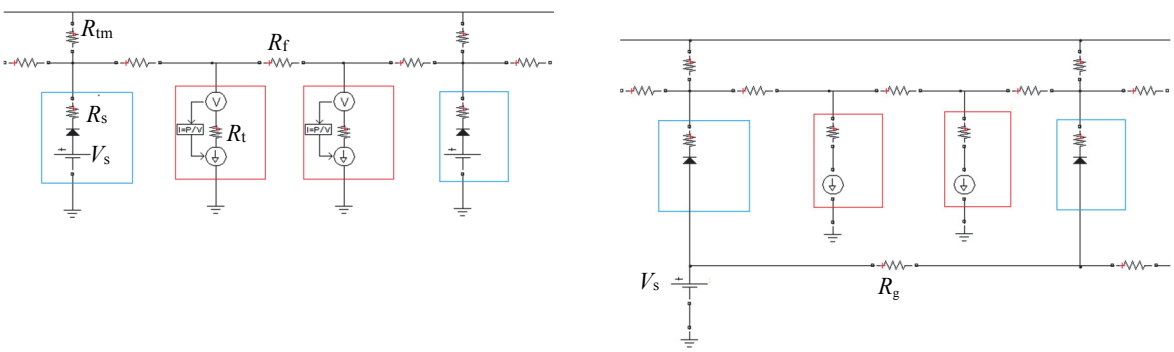

(a) Model A with a simple voltage source substation model

(b) Model B with a grid-connected substation model

Figure 2. Schematic view of the DC electric circuit model.

The superconducting cables are modelled as zero-resistance conductor connecting the adjacent substation outputs. Electric resistance of a connecting line between a superconducting cable and a conventional feeder cannot be ignored and therefore modelled as a single resistor [4].

The specifications of the DC electric railway system mode are summarized in table 1.

Table 1. Specifications of the DC electric railway system model.

Substation	Internal resistance (R_s)	0.0225	[Ω]
	Open-circuit voltage (V_s)	1590	[V]
Feeder	Resistance (R_f)	0.0333	[Ω/km]
Transmission line	Equivalent resistance (R_g)	0.1	[Ω /km]
Train	Internal resistance (R_t)	0.015	[Ω]
	Weight per train	186	[tons]
Superconducting cable	Terminal resistance (R_{tm})	0.01	[Ω]
	Cable length	22.2	[km]
	Heat penetration per length	1000	[W/km]
	Heat penetration per connector	500	[W]
	Number of connectors	2 × 5	
	COP[a] of a cooling system	0.1	
	Total electric power for cooling the superconducting cable system	27.2	[kW]

[a] COP: Coefficient of performance

3. Results and discussions

3.1. Analysis on energy conservation

Energy consumption and conservation were analysed using the model shown in figure 2 (a). Figure 3 shows total energy consumed by all trains for five minutes in a model with or without superconducting cables. The analyses were carried out using 300 different patterns of train operation mentioned in 2.1.

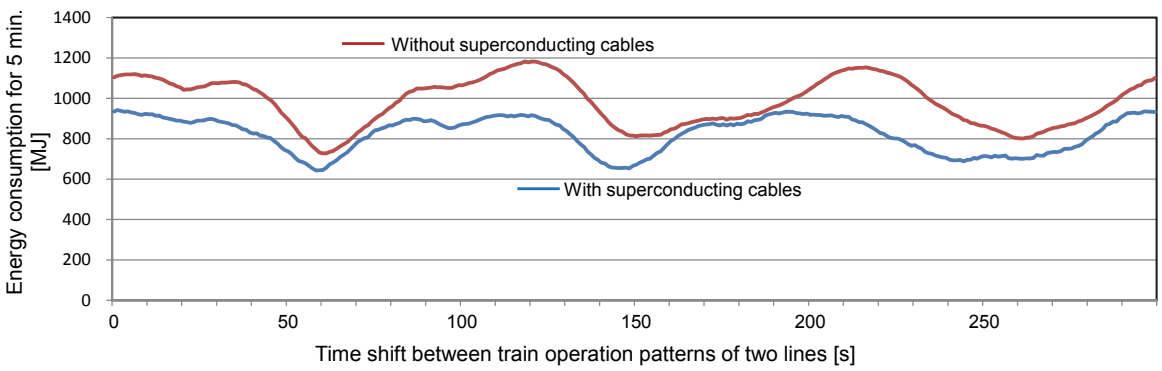

Figure 3. Energy consumption for five minutes in a model with or without superconducting cables.

It has been confirmed that the introduction of superconducting cables can conserve energy more than the cooling energy needed to keep the cable in a superconducting state. Although the amount of energy conserved differs according to the configured operation plan, or "time shift", the average energy conservation rate was estimated to be approximately 16% from figure 3.

3.2. Analysis of load distribution and concentration among substations

Figure 4 shows the time variations of substation output currents for a five-minute train-operation period. In the case without superconducting cables, shown in figure 4 (a), there are current peaks over 2 kA at some of the substations. On the other hand, in the case with superconducting cables, shown in figure 4 (b), these peaks are suppressed by supplying power from other substations. This clearly shows that the introduction of superconducting cables greatly contributes to levelling electric loads among the substations, thus decreasing the current capacity of substations.

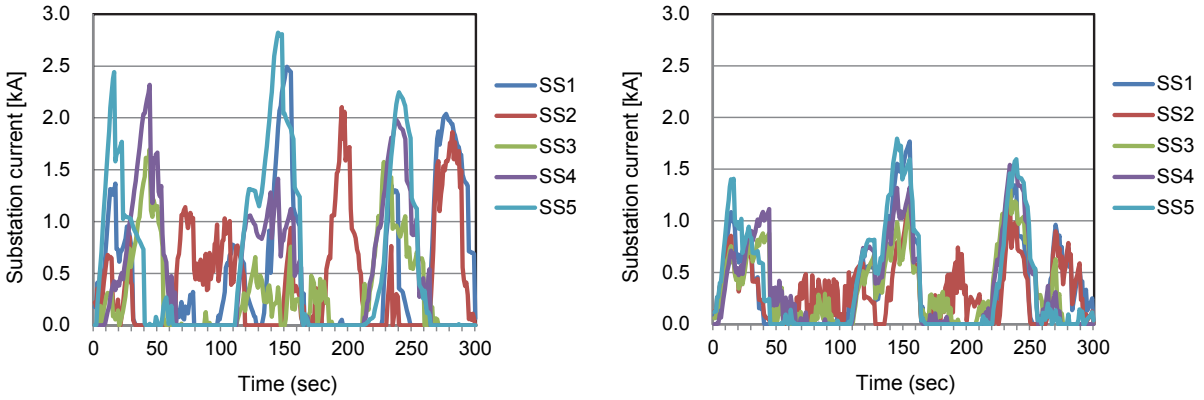

(a) Without superconducting cables (b) With superconducting cables

Figure 4. Substation output currents.

Figure 5 shows the dependence of substation peak current on the substations, with or without superconducting cables, and the grid-connected model shown in figure 2 (b) or not (figure 2 (a)). The left two groups of results shown in figure 5 were obtained using Model A shown in figure 2 (a) and the right two groups were obtained using Model B shown in figure 2 (b), where the railway substations receive power from the equivalent AC power grid model through a resistance of $R_g = 0.1$ [Ω/km]. As a result, the voltages of the substations are different from one another. The output voltage is likely to be the highest at SS1, and the lowest at SS5.

In the cases without superconducting cables, there is only a small difference in the peak currents between the results obtained using Model A and Model B. The case with superconducting cables and a 66 kV class AC power grid, the load current is still well shared among the substations. However, when a 22 kV class grid is assumed, the peak current at SS1 is as high as that before introducing superconducting cables. This suggests that, if unbalance of the substation output voltages is larger than a certain level, superconducting cables may cause a load current concentration to a certain substation.

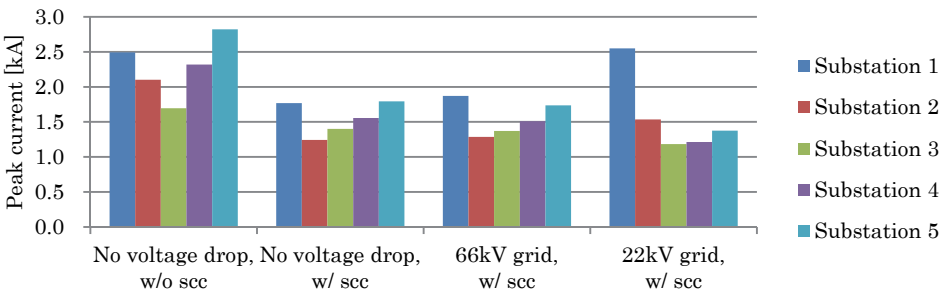

Figure 5. Peak current at each substation.

4. Conclusions

The effects of introducing superconducting cables to DC electric railway were analysed. When trains are operated in a five-minute interval on the model line, 16% conservation of electric energy is possible. When the output voltages of the substations are almost the same, electrical load can be well distributed among the substations through superconducting cables. This leads to a substation design of a reduced current capacity. On the other hand, the electrical load may be concentrated on a certain substation, if the output voltages of the substations are not even enough.

References

[1] Tomita M *et al* 2013 *IEEE Trans. Appl. Supercond.* **23** 3601504
[2] Ohsaki H *et al* 2013 *IEEE Trans. Appl. Supercond.* **23** 3600705
[3] Takagi R 2012 *IET Electr. Syst. Transp.* **2** 103
[4] A Superconducting DC Cable. EPRI, Palo Alto, CA: 2009. 1020458.