Journal of Physics: Conference Series

Study of the sheath potential structure using emissive probe in a dc magnetron plasma

To cite this article: Sankar Moni Borah *et al* 2010 *J. Phys.: Conf. Ser.* **208** 012128

Study of the sheath potential structure using emissive probe in a dc magnetron plasma

Sankar Moni Borah[1], Heremba Bailung and Joyanti Chutia

Plasma Physics Laboratory, Material Sciences Division,
Institute of Advanced Study in Science & Technology (IASST),
Vigyan Path, Paschim Boragaon, Garchuk, Guwahati, Assam-781 035, India

Email: sankarmoni@gmail.com

Abstract. The sheath potential structure variation is very important to understand the discharge characteristics. Plasma sheath is making significant influence on the charged particles and the energy flux to the wall, which in turn greatly modifies the absorption, emission of impurities, other discharge characteristics of the plasma and also the sputtering and deposition. In this study, we have examined the potential structure in a direct current magnetron plasma sputtering discharge used for thin film deposition. An emissive probe is used for this study at different plasma discharge conditions by varying the discharge voltage, the gas pressure and the externally applied magnetic field strength. Results from this study show that the sheath formed near the cathode is greatly influenced by the above plasma parameters which are responsible for the quality of the deposited film.

1. Introduction

Direct current magnetron device configuration is used for sputter deposition of different compound films in a large number of technological fields [1-3]. Its principle is based on crossed electric (E) and magnetic (B) fields which confine electrons in closed $E\times B$ drift loops near a negatively biased cathode target, where E is provided by the plasma sheath and presheath and B is produced by permanent magnets or by current carrying coils [4, 5]. Study on the investigation of plasma sheath behaviour in a plasma containing electrons, positive ions etc have gained considerable attention in recent years. The sheath behaviour influences the plasma processing techniques such as surface coating with reactive sputtering, plasma etching, chemical vapour deposition and therefore, it is essential to have a better understanding of the plasma sheath formed near the physical boundary to optimize the processing performance in such plasma processes [6]. Bohm formulated the criteria for sheath formation and introduced the idea of presheath [7]. The sheath electric field around the cathode controls the ions accelerated towards the cathode to cause sputtering. On the other hand, the electrons are accelerated through the sheath away from the cathode to initiate ionization. The sheath formation between plasma and the negative electrode in the presence of charged particles also alters the stability conditions. A substantial number of theoretical research on the boundary layer problem in both unmagnetised and magnetized plasma have been reported [8].

[1] To whom any correspondence should be addressed.

Probe diagnostics of various types can be applied to determine plasma characteristics near plasma boundaries. A few such diagnostics are emissive probes, Langmuir probes, Mach probes and energy analysers [9]. Emissive probe has been used for accurate measurement of plasma potential in direct current discharges for many years [10, 11]. An electrically isolated probe immersed in a plasma reaches a floating potential φ_f which is negative with respect to the space potential Φ by an amount equal to the sheath potential φ_s. This is set by the requirement that there is no net current flow to the probe, in other words, it is just sufficient to repel most of the incident electron flux to equalize the ion and electron currents. This leads to the well known relationship, $\varphi_s = \alpha T_e$, where α is the dimensionless sheath potential [12]. The present investigation is aimed to examine the potential structure in a direct current magnetron plasma sputtering discharge used for thin film deposition with the help of an emissive probe by varying the discharge voltage, the gas pressure and the externally applied magnetic field strength.

2. Experimental setup

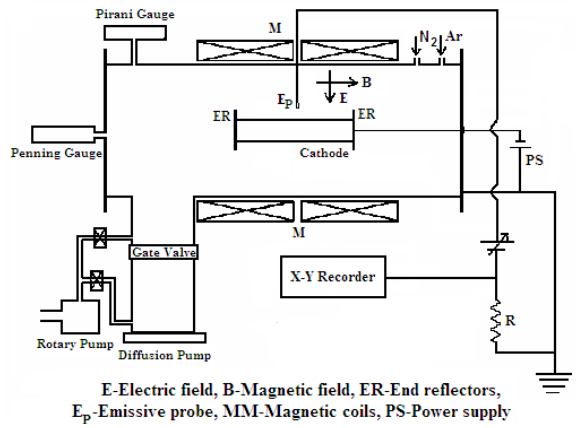

Fig.1(i): Schematic diagram of experimental set-up

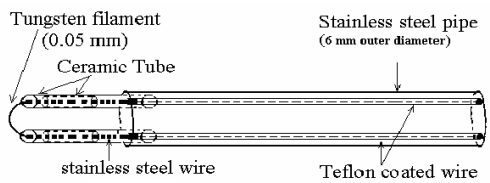

Fig. 1(ii): Schematic diagram of emissive probe

The experimental magnetron device is a stainless steel cylindrical chamber having dimension of 30 cm in diameter and 100 cm in length. A titanium cylinder of length 25 cm and outer diameter 3.25 cm is placed co-axially inside the chamber which acts as the cathode. A schematic diagram of the experimental set up along with the probes and accessories is shown in figure 1(i). For generation of a steady axial magnetic field, two coils (1500 turns in each) are placed around the body of the chamber. Direct current is passed through both the coils in the same direction which produces an axial magnetic field parallel to the cathode surface that is uniform within a length of ~ 40 cm at the central region of the chamber. Low pressure of the order of 10^{-6} Torr is created inside the chamber using a combination of rotary and diffusion pumps. The discharge is ignited by applying DC voltage (~ 600 V) between titanium electrode as cathode and the chamber as anode. Argon is used as working gas. For deposition of thin films, nitrogen is used as the reactive gas. The plasma potential profile is recorded with the help of an emissive probe (Ep), made of 1% thoriated tungsten wire of 0.05 mm in diameter and 0.3 cm in length as shown in figure 1(ii). The two ends of the tungsten wire are spot welded to two stainless steel supporting rods which are covered by ceramic tubes. The procedure for interpretation of emissive probe characteristics is based on the fact that electron emission takes place when the probe bias is more negative than the local plasma potential [10].

3. Results and discussion

The plasma potential variation is measured continuously in radial direction between the cathode and the anode magnetron chamber body by varying different plasma parameters like the discharge voltage, the gas pressure and the applied magnetic field strength. A plot of the potential profile is shown in

figure 2. The sheath thickness is measured from the plasma potential profiles from semi-logarithmic plot of the plasma potential versus distance. The intersection point of the tangents drawn one in sharp fall region of potential closer to cathode and the other in constant plasma region in the bulk plasma is taken as the measure of sheath.

Figure 3 represents the variation of sheath thickness and discharge current with discharge voltage as a parameter at fixed argon nitrogen total pressure of 2×10^{-3} Torr and magnetic field of 100 Gauss. Both sheath thickness and discharge current increases with increase in the discharge voltage which influence the space charge density near the cathode.

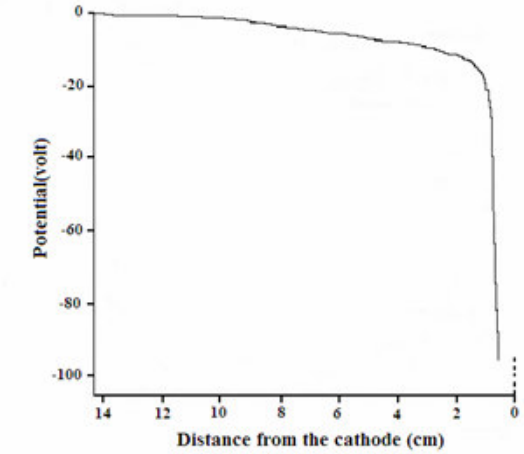

Fig. 2: Plot of potential profile using emissive probe at V_d = 600 V, B = 100 G and $P_{Ar\text{-}N_2} = 2\times10^{-3}$ Torr with $Ar:N_2$=1:1

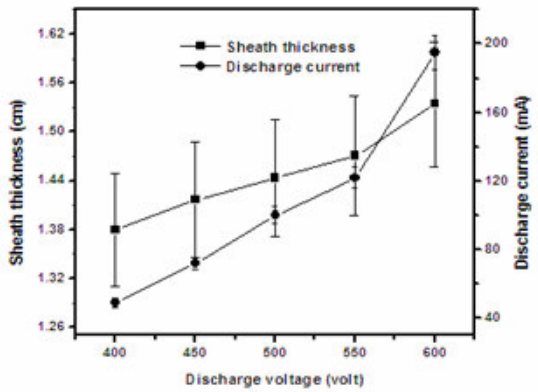

Fig. 3: Sheath thickness and discharge current variation with discharge voltage, B = 100 G, $P_{Ar\text{-}N_2} = 2\times10^{-3}$ Torr with $Ar:N_2$=1:1

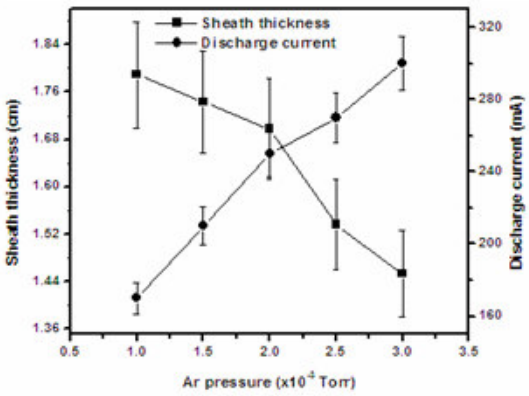

Fig. 4: Sheath thickness and discharge current variation with argon pressure, V_d = 600 V, B = 100 G and $P_{N_2} = 1\times10^{-3}$ Torr

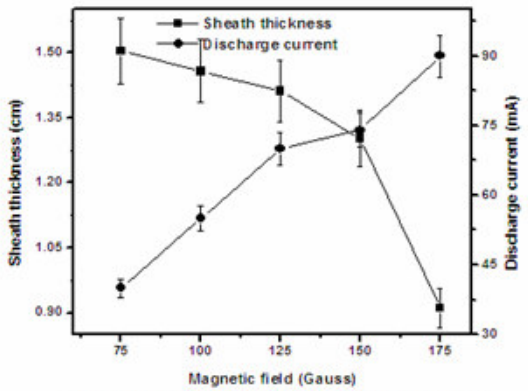

Fig. 5: Sheath thickness and discharge current variation with magnetic field, V_d = 450 V, $P_{Ar\text{-}N_2} = 1\times10^{-3}$ Torr with $Ar:N_2$=1:1

The variation of sheath thickness and discharge current with argon pressure as a parameter at fixed discharge voltage of 600 V, nitrogen partial pressure of 1×10^{-3} Torr and magnetic field of 100 Gauss is shown in figure 4. The sheath thickness is 1.79 cm at 1×10^{-3} Torr argon pressure and it decreases to 1.45 cm at 3×10^{-3} Torr argon pressure. As plasma density increases with increasing argon pressure, the space charge density in the cathode sheath increases and the current density to the cathode also increases resulting in the contraction of the plasma sheath.

Figure 5 represents the variation of sheath thickness and discharge current with magnetic field as a parameter at fixed argon nitrogen total pressure of 1×10^{-3} Torr and discharge voltage of 450 V. With

increasing magnetic field the plasma potential is found to decrease. At higher magnetic fields the electrons become more and more confined, therefore the plasma potential becomes more negative to control the ion loss rate and maintain the quasi-neutrality of the plasma. For all the magnetic fields, a sharp radial gradient in the plasma potential and hence strong electric field is noted near the cathode region resulting in the formation of the sheath. The enhanced confinement of electrons near the cathode surface will reduce the effective positive ion concentration within the sheath. This should effectively result in the expansion of the cathode sheath. On the contrary, there occurs an interesting observation in the sheath thickness when magnetic field is increased. The cathode sheath is found to contract with the increase in the applied magnetic field strength value. The increase in the overall plasma density is responsible for the decrease in the cathode sheath thickness. Here, the plasma density influence on the nature of the cathode sheath thickness is more dominating than the electron confinement factor.

For quality deposition of thin films, it is necessary to optimize the magnetron sputtering by maintaining the argon and reactive gas (nitrogen) partial pressures. This variation in the argon and nitrogen partial pressures influences the plasma sheath, thoroughly discussed in [3], which is significant in the ionization process as well as the plasma transport mechanism of the discharge. It has been observed that the space charge density in the cathode sheath and the current density to the cathode decreases when nitrogen concentration is increased. In this study, it has been found that at $Ar:N_2$ partial pressure ratio of 1:1, the region corresponding to the presheath to sheath transition is almost smooth indicating the uniform nature of the electric field. With the increase in sheath thickness, the strength of the sheath electric field decreases which in turn will lead to the lowering of the energy of the ions bombarding the cathode resulting in low rate of sputtering.

4. Conclusion

This experimental observation gives an understanding on the variation of the plasma potential in a direct current cylindrical magnetron sputtering system. Also, the dynamics of the gas species near the target of a magnetron sputtering system depend on the potential structure, which in turn controls the ionization and sputtering rates in the plasma discharge. It has been observed that both the sheath thickness and the discharge current variations are influenced by discharge voltage, gas pressure and the magnetic field strength.

Acknowledgements

This work is supported by a SRF grant from the Council of Scientific and Industrial Research-Human Resource Development Group (CSIR-HRDG), Government of India.

References

[1] Debal F, Bretagne J, Jumet M, Wautelet M, Dauchot J P and Hecq M 1998 *Plasma Sources Sci. Technol.* **7** 219
[2] Grill A 1994 *Cold Plasma in Materials Fabrication* (New York: IEEE)
[3] Borah S M, Bailung H, Pal A R and Chutia J 2008 *J. Phys. D: Appl. Phys.* **41** 195205
[4] Wendt A E, Lieberman M A and Meuth H 1988 *J. Vac. Sci. Technol. A* **6** 1827
[5] Sheridan T E, Goeckner M J and Goree J 1990 *J. Vac. Sci. Technol. A* **8** 30
[6] Bailung H, Boruah D, Pal A R and Chutia J 2004 *Phys. Lett. A* **333** 102
[7] Bohm D 1949 *The Characteristics of Electrical Discharges in Magnetic Fields*, ed. Guthrie A and Wakerling R K (New York: McGraw Hill)
[8] Singha B, Sarma A and Chutia J 2001 *Rev. Sci. Instrum.* **72(5)** 2282
[9] Hershkowitz N 1989 *Plasma Diagnostics*, ed. Auciello O and Flamm D L (San Diego CA: Academic)
[10] Kemp R F and Sellen Jr J M 1966 *Rev. Sci. Instrum.* **37** 455
[11] Mravlag E and Krumm P 1990 *Rev. Sci. Instrum.* **61** 2164
[12] Bradley J W, Khamis R A, Sanduk M I, Elliot J A and Rusbridge M G 1992 *J. Phys. D: Appl. Phys.* **25** 1443