PUBLICATIONS OF THE ASTRONOMICAL SOCIETY OF THE PACIFIC
100: 1001–1007, August 1988

A CCD SPECTROGRAPH WITH OPTICAL FIBER FEED

INGEMAR FURENLID

Department of Physics and Astronomy, Georgia State University, Atlanta, Georgia 30303

AND

OCTAVIO CARDONA

Instituto Nacional de Astrofisica, Optica y Electronica, Tonantzintla, Apdo Postal 51 y 216, 72000 Puebla, Pue., Mexico

Received 1988 February 25, revised 1988 April 22

ABSTRACT

A recently-constructed fiber-fed CCD-equipped spectrograph of the off-plane Ebert-Fastie type is described. Design goals were stability and efficiency, coupled with optical properties suitable for a diode array detector. Key elements in the design are described and the focal surface as well as aberrations are calculated. The limiting performance is investigated for four gratings and two levels of S/N per pixel, 100 and 10.

Key words: spectrograph–optical fiber feed–instrumentation

I. Introduction

A collaboration in instrument development and research has been established between Instituto Nacional de Astrofisica, Optica y Electronica (INAOE), Tonantzintla, Mexico, and Georgia State University (GSU), Atlanta, Georgia. The first effort in this program is the construction of a spectrograph to be used at the Cananea Observatory of INAOE. Cananea Observatory is located in the state of Sonora in northern Mexico, around 150 miles by road southeast of Tucson, Arizona. The observatory is equipped with a new 2.14-m telescope, inaugurated in September 1987. The spectrograph described below will be the first major auxiliary instrument attached to the 2.14-m telescope and is essentially finished at the time of writing (February 1988), with only comparison and flat-field devices still to be constructed; regular operation of the instrument is expected to begin during the summer of 1988.

The spectrograph, which is of the off-plane Ebert-Fastie type (Ebert 1889; Fastie 1952), uses a CCD as a detector and is furnished with an optical fiber bundle for the coupling to the telescope. The design of the spectrograph, its properties, and the projected performance are described in detail below. A general goal of the design has been to generate an instrument of good optical efficiency and very high stability, with all major functions under remote control for warm-room operation, in keeping with the mode of operation of the 2.14-m telescope. The spectrograph uses low spectral orders and only one stretch of spectrum is observed per CCD frame. A design of the echelle type was specifically avoided, the major reason being the huge rate of data collection associated with echelles, a rate that would tax our human as well as our computer resources beyond the manageable. Another reason is the large height of the "slit" of the fiber bundle at the spectrograph input end which would allow only a few simultaneous orders on the detector.

Several investigators have recently turned to fiber-fed spectrographs using diode array detectors for high-resolution stellar spectroscopy. For example, Felenbok, Guerin, and Czarny (1986) have constructed an itinerant instrument of Czerny-Turner type, and Mandel (1987) has described a fiber-fed echelle.

II. The Spectrograph Design

The choice of spectrograph type was dictated by the requirements of efficiency and stability as well as by the use of an optical fiber input and a CCD as a detector. The rigid, flat surface of the CCD demands a negligible field curvature and the CCD pixel structure calls for point aberrations that are small compared to the pixel size. Good efficiency comes from as few optical components as possible. A high degree of mechanical and thermal stability is achieved through the use of an optical fiber as a coupling to the telescope, allowing the spectrograph to be constructed as a table-top instrument, placed in a thermally stable environment.

All these requirements can be fully incorporated in a spectrograph of the off-plane Ebert-Fastie type, shown schematically in Figure 1. This design contains in its basic form only two optical elements, one plane grating and one mirror, in which the beam of light is reflected twice. Light enters the spectrograph at the entrance slit, in this case a linear array of optical fibers, located on one side of the grating so that the central ray travels through the spec-

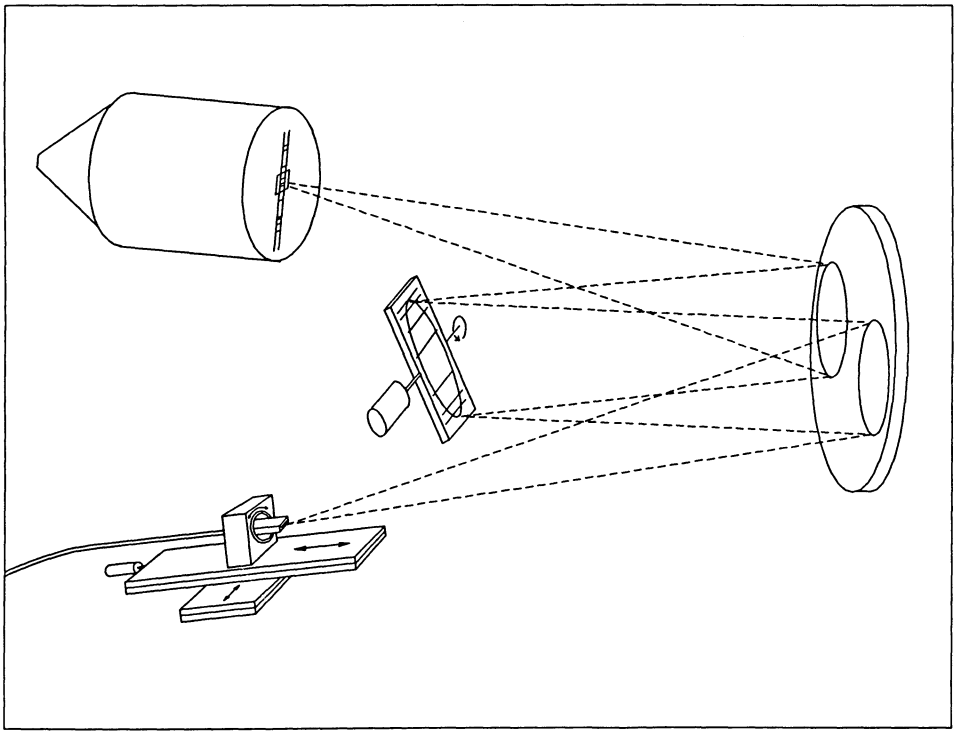

FIG. 1–An off-axis Ebert-Fastie spectrograph contains one mirror, a grating, an input device for light, and a detector. The symmetry of the design leads to excellent optical properties.

trograph in a horizontal plane. From the slit light travels to the appropriate half of the mirror, which acts as a collimator, is reflected back to the grating as a parallel beam, and returns dispersed to the opposite half of the mirror, which acts as a camera mirror and focuses the spectrum on the detector. This arrangement orients the dispersion in a vertical direction, parallel to the nearest grating edge, preventing the spectrum from overlapping the grating, a problem in in-plane Ebert-Fasties. The use of a single mirror also leads to unit magnification between the input and output sides in the spectrograph. The various components of the instrument are housed in an aluminum box, approximately 1500 × 450 × 450 mm in size. The optical fiber input is mounted in a vertical, rotating table, which in turn is fixed to two mutually perpendicular translation stages; all these stages are off-the-shelf commercial products from Daedal, Inc. One translation stage is aligned with the optical axis and motorized, serving as a remotely-controlled focusing device. The purpose of the rotating stage is to orient the fiber array slit perpendicularly to the dispersion direction, and the final translator stage serves to place the observed stretch of spectrum in the appropriate sidewise position on the detector.

The comparison source, a Thorium hollow cathode tube, and the flat-field source, a high-intensity incandescent lamp, are placed at the telescope interface and feed light of matched beam spread (1:12) into the fiber aperture. One movable mirror selects flat-field or comparison source and another movable mirror directs the light onto the fiber head. The interface further contains a thin piece of clear glass placed in the stellar beam at an angle of 15° to the focal plane, sending a fraction of the light to a TV camera, used for guiding when the observed object is relatively bright. An aluminized mirror placed off the stellar beam is used for acquisition and offset guiding for faint objects. Two filter wheels with cuton and cutoff filters, respectively, are also placed in the telescope interface unit; the comparison and flat-field sources and mirrors and the filter wheels are remotely controlled.

The spectrograph mirror is an f :3.3 paraboloid of 980-mm focal length and 300-mm diameter, produced in the optical shops of INAOE. The mirror is mounted in a commercial mirror cell, which has fine adjustments for defining the position of the optical axis of the mirror with a resolution of ±0.5 arc sec.

The grating cell holder is mounted on a stepping motor-driven rotation stage, oriented so that the grating rotates around a horizontal axis coinciding with the central groove of the grating. The grating holder accepts any of four purchased gratings in their cells, the gratings having a ruled area of 128 by 154 mm and a number of grooves per mm of 1200, 400, 150, and 50, respectively. The fiber input stage, the grating table, and the CCD dewar are all mounted on bases built in the INAOE machine shop and are equipped with set screws and counter screws for full freedom of adjustment and locking in position.

The CCD detector is part of a complete photometric system delivered by Photometrics, Inc., Tucson, Ari-

zona, as a turnkey operation. Extensive testing has shown that the system functions as specified; the detector suffers from a slight nonlinearity noticeable at high light levels. The present CCD used in the system is a TI 4849 with 576 by 384 pixels; it has been found to be quite satisfactory, although a thinned Tektronix 512 × 512 is on order and will replace the TI CCD as soon as it becomes available. The spectrum covers approximately 70 pixels in width on the CCD at a pixel size of 27 × 27 μm and the normal mode of readout will be by charge summing on the CCD chip into one or a few strips of spectrum depending on specific observing requirements.

Once the spectrograph is fully operational with all optical components correctly aligned, the whole box will be placed in a larger container, surrounded by a thick layer of thermally-insulating material to ensure a maximum of thermal inertia in the instrument. We can estimate the sensitivity to thermally-induced changes of focus as the sum per degree Celsius of expansion of the aluminum of the box and of the increase in focal length of the Pyrex mirror. Using tabulated values for the expansion coefficients we find a change in focal position of 30 μm per degree C, leading to an increase in the diameter of the focal blur spot of around 4 μm. We may thus conclude that a temperature change in the spectrograph of less than 5° C is tolerable without refocusing and further note that changes of such magnitude in a well-insulated instrument during one night of observing must be rare.

III. The Optical Fiber Bundle

There are several strong arguments in favor of feeding a spectrograph by means of an optical fiber arrangement. The spectrograph can be stationary, avoiding the problems of flexure associated with a telescope-mounted instrument. A fiber input provides an absolutely stationary "slit", leading to a tighter relation between wavelength and position on the detector. An optical fiber bundle can also be arranged as an image slicer and improve the throughput in the telescope/spectrograph interface while preserving a high spectral resolution. All these properties have been exploited in the optical fiber bundle used in the spectrograph described here.

The fiber bundle was manufactured by Fiberguide Industries, Inc., using their "Superguide" silica fibers, and delivered as a complete unit with finished heads at both ends of the fiber and with the external optical surfaces polished. The fiber bundle has a length of 10 m and consists of 34 individual fibers, each having a core diameter of around 45 μm and a total diameter of around 55 μm; the cladding is thus only 5 μm thick. The telescope end of the fiber consists of the 34 fibers packed closely into a circular shape, as shown in Figure 2, whereas the exit end at the spectrograph has the 34 fibers arranged in a linear array, as seen in Figure 3. The circular entrance configuration of the fibers has a diameter of 300 μm, corresponding to 2.5 arc sec in the Cassegrain focus of the 2.14-m telescope and can accommodate even relatively poor seeing with only moderate loss of light. The linear array size at the fiber exit is approximately 50 × 1900 μm, i.e., the "resolving slit width" is around 0.4 arc sec, while the "effective slit width" remains 2.5 arc sec; the fiber bundle functions both as a waveguide and an image slicer. Around one-third of the light is lost due to geometric factors at the input end of the fibers, i.e., the packing fraction is around 0.65. The light loss is smaller than might first appear because the cladding also propagates light and the cladding modes are perfectly usable in the spectrograph. The light transmission through the 10 m of fiber is around 80% at 4000 Å, rises to 90% at 5000 Å, and continues generally to increase toward longer wavelengths (Walker 1986). In order not to overestimate the fibers, their total transmission in the visible, including all light losses, has been downgraded to 40% in the performance estimates given below. The general properties of fibers have been investigated by in-house research (Walker 1986), confirming their usefulness as telescope/spectrograph couplers. The degradation of beam spread has been studied in particular (see also Barden, Ramsey, and Truax 1981) and led to the conclusion that an input beam spread of 1:12 can be realistically assumed to emerge with a 1:8 beam spread, and this assumption was applied in the optical design. The exact value of the beam spread is in practice not critical because of the rapid falloff of intensity as the angle to the fiber axis increases; losing the outermost ring of a beam will not significantly change

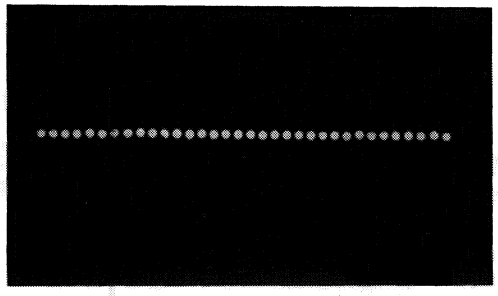

FIG. 2–Photograph of the telescope end of the fiber bundle, which consists of 34 fibers packed into a circular shape.

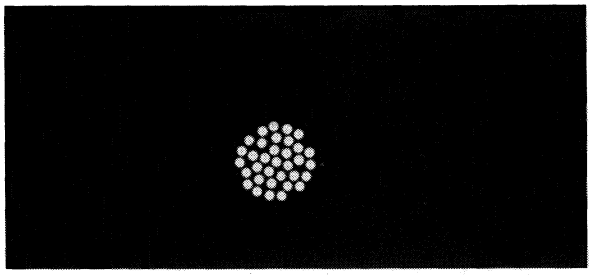

FIG. 3–Photograph of the spectrograph side of the fiber bundle showing the 34 fibers arranged in a linear array.

the total intensity. Needless to say, fibers with different optical properties, such as high UV transmission, and in other configurations will be acquired as the need arises.

IV. Imaging Properties

The optical properties of off-plane Ebert-Fastie spectrographs have been discussed in the literature by several authors. Welford (1963) has pointed out that the imaging can be improved by using a paraboloid as the collimator/camera mirror instead of the originally suggested spherical mirror. The paraboloid avoids spherical aberration and produces images that on axis are virtually free from any point aberration. Another improvement in the imaging quality can be achieved by placing the grating at the appropriate position along the optical axis of the mirror (Mielenz 1964). The properties of the focal surface will be discussed in this section and the point aberrations in the next.

The use of a CCD as a detector requires a focal surface of negligible field curvature. And even though a curved focal surface can be flattened by additional optics it is certainly more efficient, and more elegant, to employ a design where the field curvature can be varied at will as in the Ebert-Fastie, where the exact location of the grating along the optical axis determines the field curvature.

Following Mielenz (1964) we define a coordinate system with the origin on the optical axis of the mirror, at the intersection with the focal plane. The x axis runs along the optical axis, the y axis is parallel to the dispersion (vertical), and the z axis is perpendicular to the dispersion (horizontal). In these coordinates the focal surface in the second-order approximation has the following form:

$$\begin{aligned} f(x,y,z) &= (x/r) \\ &+ [1 - 3(m/r)^2]\,(y/r)^2 \\ &+ [1 - (m/r)^2] \\ &\times (z/r)^2 - 1/2 = 0 \ , \end{aligned}$$

where r is the radius of curvature of the mirror and m is the distance from the center of curvature to the grating.

The equation describes a second-order surface of a shape that depends on the choice of parameters. Eliminating the y coordinate generates the condition for no field curvature along the dispersion and leads to an equation for the focal surface of the form:

$$f(x,z) = (x/r) + 2/3 \times (z/r)^2 - 1/2 = 0 \ ,$$

where we have put $m/r = 1/\sqrt{3}$. For a constant z value the solution is x = constant, and the focus is located along a straight line, *i.e.*, field curvature is equal to zero for the chosen value of m/r (= 0.577). The field curvature thus vanishes when the grating is located 7.7% of the radius of curvature inside the focus of the mirror; focus is at m/r = 0.500. Over the small extent of a CCD the second-order approximation holds quite well, but it still seems prudent to calculate the focal surface in the fourth-order approximation as it is readily available in Mielenz (1964). The equations read

$$\begin{aligned} x/r &= 1/2[1 - (m/r)^2\gamma^2 + 1/3(m/r)^2\gamma^4] \\ &- 1/4\{[1 - 3(m/r)^2] \\ &- [(m/r)^2 - 4(m/r)^3 + 3(m/r)^4]\gamma^2\}\alpha^2 \\ &+ 1/48[1 - 30(m/r)^2 \\ &+ 48(m/r)^3 - 27(m/r)^4]\alpha^4 \end{aligned}$$

$$\begin{aligned} y/r &= \pm\, 1/2\sqrt{\alpha^2 - \gamma^2}\,\{1 - 1/6[1 + 6(m/r)^2 \\ &- 12(m/r)^3]\gamma^2 \\ &- 1/6[1 - 9(m/r)^2 + 12(m/r)^3]\alpha^2\} \end{aligned}$$

$$\begin{aligned} z/r &= 1/2\,\gamma\{1 - 1/6[1 + 6(m/r)^2 \\ &- 12(m/r)^3]\gamma^2 \\ &+ 1/2[3(m/r)^2 - 4(m/r)^3]\alpha^2\} \end{aligned}$$

where γ is the half angle between object and image (slit and central point of spectrum) at the center of the mirror, as shown in Figure 4. The angle α is the skew angle at the grating between the optical axis and the central ray after deviation by the grating; see Figure 5.

Inserting the parameters from the actual spectrograph, i.e., r = 1960 mm, m = 1140 mm (which includes a small fourth-order correction), and the perpendicular distance of the input slit to the center of grating = 103 mm, as well as the angles α and γ derived from these numbers, will generate the three-dimensional focal surface. The field curvature is less than 1 μm over the length of the CCD, and the spectrum is also straight in the yz plane to within 1 μm, defining an excellent focal surface for a CCD detector.

The focal surface has also been calculated for a possible, future 2048 pixel Tektronix CCD in order to test a larger detector. We find a field curvature over the whole length of 55 mm of ±4 μm and a deviation of the spectrum from a straight line in the yz plane also of ±4 μm, well within acceptable limits.

V. Aberrations

In order to fully describe the focal surface it is also necessary to consider aberrations, and our goal here is to generate a design where the aberrations, measured as "blur spots" in the focal plane, stay well within one pixel in size. The paraboloid shape of the mirror eliminates spherical aberration, leaving us to consider the other two-point aberrations, coma and astigmatism.

Welford (1965) has studied aberrations in grating spectrographs, and the cases discussed include the off-plane Ebert-Fastie design. In slightly modified form, to conform with the notation above, his expression for coma is

$$\begin{aligned} C &= -(m\theta/r^3)v(u^2 + v^2) \\ &+ [(r - m)\theta/r^3]Qv(u^2 + v^2) \ , \end{aligned}$$

where θ is the field angle, Q the coefficient of asphericity,

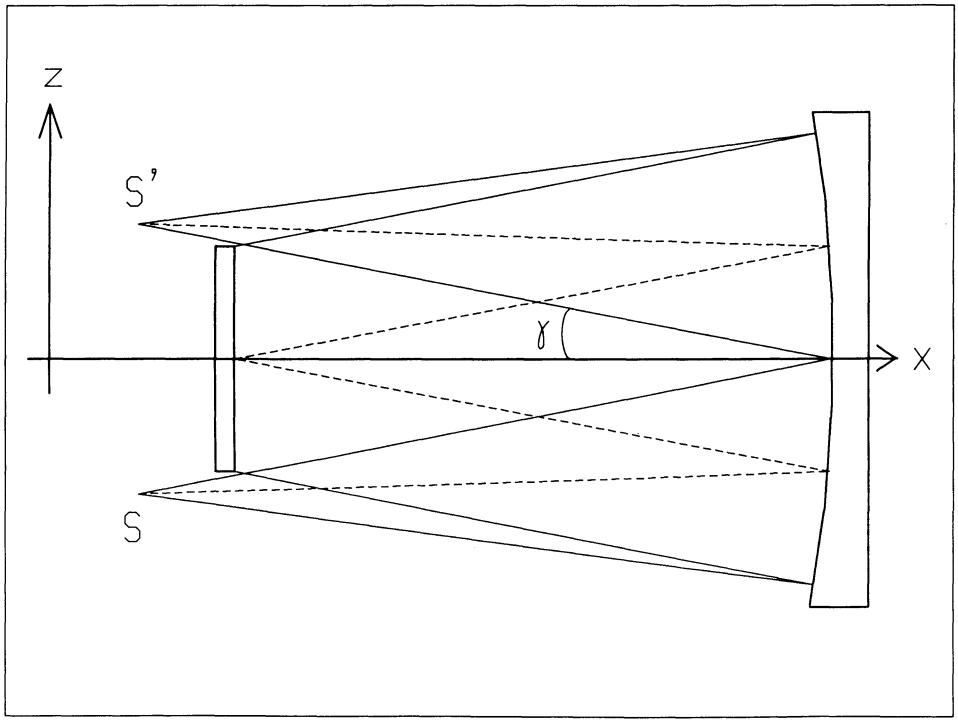

FIG. 4–The half angle at the center of the mirror between object and image, measured in the horizontal plane, defines the angle γ.

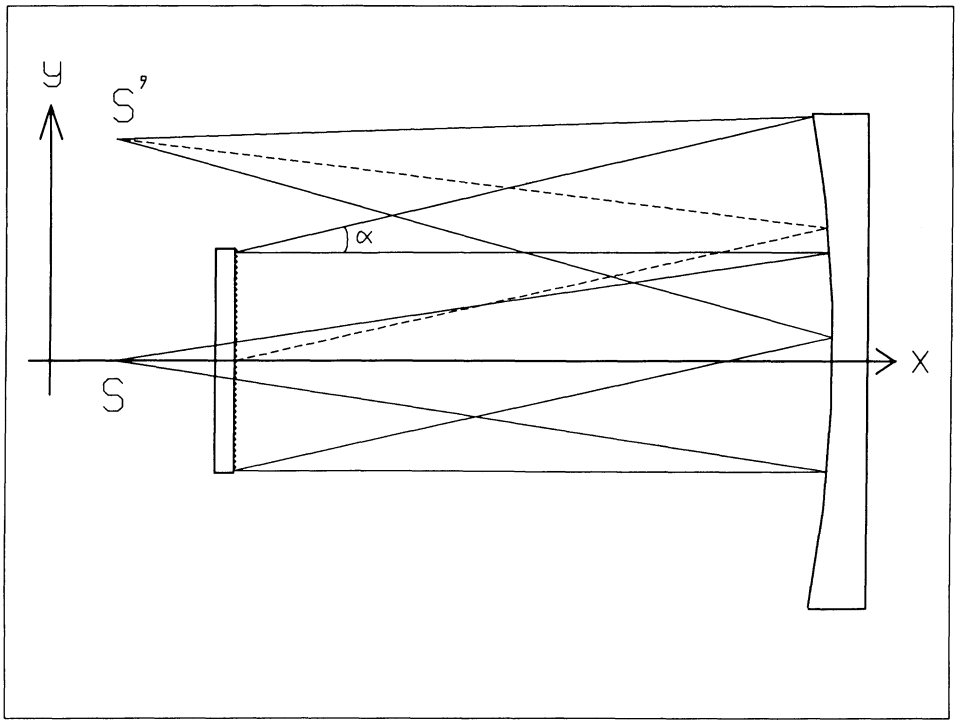

FIG. 5–The skew angle between optical axis and a beam deviated by the grating defines the angle α.

and u and v the coordinates in the plane of the field stop, the grating in this case. The origin of the coordinate system is the center of the grating and u is measured horizontally, along the grating grooves, and v vertically. The first term in the expression may be termed the spherical part and the second term the aspherical part. Inserting the Q value for a paraboloid, -1, as well as the appropriate parameters for the spectrograph, and con-

verting the resulting wavefront errors to "blur spots" in the focal plane, we find the maximum diameter of the comatic spot at the edge of the CCD to be 8 μm and thus well within one pixel.

Astigmatism, given as wavefront error, is given by the following expression

$$A = m^2\theta^2 v^2/r^3 + [(r - m)^2 \theta^2/r^3]Qv^2 \ .$$

Because a CCD is small in size the field angle enters here as a small quantity squared, and astigmatism therefore remains negligibly small over the whole field; the "blur spot" stays within a 2-μm diameter.

Aberrations have also been investigated for a 2048-pixel CCD. The comatic spot reaches a maximum diameter of around 30 μm at the extreme edge of such a CCD. It should be pointed out, however, that the outer edge of the comatic image is very faint and it is more realistic to estimate the effective maximum comatic spot to be around 20 μm in diameter, making the spectrograph perfectly usable even with the largest CCD contemplated at this time. Of course, astigmatism remains insignificant compared to coma.

VI. Performance Estimate

Many aspects of an instrument relating to its performance are qualitative in character and very difficult to estimate; the instrument in practical use will reveal its merits and flaws. A design goal has been a maximum of stability, mechanical as well as thermal, and only experience at the telescope will quantitatively define the degree of success. One property which can quite realistically be calculated in advance, however, is the limiting magnitude that can be reached under specified conditions of dispersion, signal-to-noise ratio (*S/N*), etc.

Let us assume that a solar-type star of zeroth apparent magnitude yields 1000 photons in the visible per second, per square cm, per Å, above the Earth's atmosphere—a standard assumption. Let us further assume that limiting magnitude is defined by an integration time of one hour and a *S/N* per pixel of either 100 or 10. We can then estimate the limiting magnitude in the visible, using the 2.14-m telescope and the spectrograph described, from a determination of the fraction of the infalling light that generates the final signal. We estimate the following fractional transmissions.

Atmospheric transmission	0.70
Reflections in telescope (two)	0.64
Guiding device	0.90
Blocking filters (two in worst case)	0.64
Fiber bundle	0.40
Reflections in spectrograph (two)	0.64
Grating efficiency	0.60
Quartz window on CCD dewar	0.90
DQE of CCD	0.60

The product of these conservatively estimated factors gives an efficiency of the total system of 0.02 or 2%. The total number of recorded photons per Å, in one hour of integration time, using an effective mirror radius of 100 cm, for a zeroth-magnitude star, equals 2.26×10^9. The limiting magnitudes for each of the gratings and for the two values of *S/N* per pixel, 100 and 10, are given in Table I. We have included readout noise, which is only 16 photoelectrons for the current CCD, and assume perfect bias and flat-field frames and that charge summing is done on the CCD chip over the full width of the spectrum. Sky background has been included in all values, although its effect is negligible unless the limiting magnitude is fainter than 15. In determining sky background it is assumed that the circular fiber input has an effective radius of 1 arc sec and that the sky has a brightness of 20th magnitude arc sec^{-2}.

The section in Table I that shows limiting magnitudes for a *S/N* of 10 per pixel is of particular interest in that Latham *et al.* (1988) have demonstrated that good-quality radial-velocity measurements can be made using cross-correlation techniques on spectra having a *S/N* value as low as 10; radial-velocity determinations can thus be made for extremely faint objects.

The brighter stars, i.e., stars four magnitudes brighter or more than the limit for a *S/N* of 100, can be observed with unusually high *S/N* values in a single frame. For these stars each pixel can be driven to a *S/N* of 100–200 and read out separately. The subsequent combining of the 34 individually reduced spectra will yield an averaged spectrum with a *S/N* value approximately six times as large as the one for a single spectrum, i.e., a *S/N* in the range 600 to 1200.

VII. Conclusions

A spectrograph of the off-plane Ebert-Fastie type has been described and its optical properties investigated. An optical fiber bundle of image slicer type is used as cou-

TABLE I

The Limiting Magnitude of Telescope and Spectrograph is Given for Each of the Four Gratings with Entries for a S/N of 100 per Pixel and 10 per Pixel*

Dispersion, Å mm^{-1}	2.9	12.0	68	201
Grating order	2	2	1	1
Grating, grooves mm^{-1}	1200	400	150	50
Dispersion, Å $pixel^{-1}$	0.08	0.31	1.80	5.40
Limiting magnitude, S/N = 100	10.6	12.1	14.0	15.2
Limiting magnitude, S/N = 10	14.8	16.2	18.0	19.0

*A sky background of 20th magnitude arc sec^{-2} is included in all values of limiting magnitude.

pling between telescope and spectrograph in order to allow the highest possible degree of photometric, mechanical, and thermal stability in the instrument. The design is shown to have optical properties very favorable for a CCD detector and to have an optical efficiency that permits spectroscopy of relatively faint objects.

We would like to express our gratitude to Dr. G. Haro, who laid the groundwork for the present Cananea facilities, and to Dr. A. Poveda, who initiated the contacts that led to construction of the instrument described. We sincerely thank Dr. C. Faulkner, Dean of the College of Arts and Sciences at GSU, for generous financial support of the spectrograph project as well as for continuing support of the scientific collaboration between INAOE and GSU. Dr. C. Arrington of the Research Office at GSU is gratefully acknowledged for travel support; and to Dr. J. Ojeda, Director of INAOE, we give our deeply-felt thanks for his interest in the project and his generous allotment of INAOE resources toward construction of the spectrograph.

REFERENCES

Barden, S. C., Ramsey, L. W., and Truax, R. J. 1981, *Pub. A.S.P.*, **93**, 154.

Ebert, H. 1889, *Wiedemann's Annanalen*, **38**, 489.

Fastie, W. G. 1952, *J. Opt. Soc. Am.*, **42**, 641.

Felenbok, P., Guerin, J., and Czarny, J. 1986, *ESO-OHP Workshop on The Optimization of the Use of CCD Detectors in Astronomy*, ed. J.-P. Baluteau and S. D'Odorico (Munich: C. Wolf and Son).

Latham, D. W., Mazeh, T., Carney, B. W., McCrosky, R. E., Stefanik, R. P., and Davis, R. J. 1988, *A.J.*, in press.

Mandel, H. 1987, in *IAU Symposium 132, Abstracts, The Impact of Very High S/N Spectroscopy on Stellar Physics*, ed. G. Cayrel de Strobel and M. Spite.

Mielenz, K. D. 1964, *J. Res. Nat. Bur. Stand.*, Vol. **68C**, Vol. 4, 205.

Walker, P. 1986, M.S. thesis, Georgia State University, Atlanta, GA.

Welford, W. T. 1963, *J. Opt. Soc. Am.*, **53**, 766.

———. 1965, in *Progress in Optics*, Vol. **IV**, ed. E. Wolf (Amsterdam: North Holland Publishing Co.), p. 241.